framery

SERIOUS ABOUT HAPPINESS

Framery One

Fire Safety

English
Version 1.0
Tampere, Finland 31.3.2022

Contents

1 Important safety and product instructions..... 5
1.1 Preface.....5
1.2 Product information..... 5
1.3 Copyright.....5
1.4 Manual contents..... 5
1.5 Intended use.....5
1.5.1 Non-conventional use.....6
1.5.2 Ambient conditions for use.....6
1.6 Warning, information, and safety symbols in this manual..... 6
1.7 Main safety risks related to the installation, maintenance, disassembly, and use of the product..... 7
1.7.1 Installation, maintenance, and disassembly.....7
1.7.2 Electrical safety..... 7
1.7.3 Fire safety.....8
1.7.4 Lifting safety..... 9
1.7.5 Use.....9
1.7.6 Moving the product on casters (optional).....11
1.7.7 Radio frequency..... 11
1.8 Location of product markings.....13

2 Installation requirements..... 16
2.1 Tools and accessories.....16
2.2 Installation dimensions..... 16

3 Disconnect the power cord..... 18

4 Disassemble the necessary parts.....19
4.1 Remove the wall body covers.....19
4.2 Remove the electrical connections from the roof.....21
4.3 Remove the glass wall.....25
4.4 Remove the front frame and door.....27
4.5 Remove the roof.....30

5 Install the wired alarm device..... 32
5.1 Prepare the installation of the wired alarm device.....32
5.2 Install the wired alarm device..... 34

6 Install the fire suppression system..... 36
6.1 Install the fire suppression system.....36

7 Reassemble..... 41
7.1 Install the roof.....41
7.2 Install the glass wall.....42

7.3 Install the front frame and door.....44
7.4 Connect the electrical connections in the roof.....48
7.5 Install the body covers.....52

8 Finalize the installation.....56

1 Important safety and product instructions

1.1 Preface

This instruction manual describes the installation of the product. Everyone involved in installing the product must read and understand the contents of the installation and safety instructions.

This instruction manual gives you necessary information for the correct installation of the product.

All product instructions are also available at **help.frameryacoustics.com**.

1.2 Product information

The information in this manual corresponds to the product at the time of delivery. All information included in this manual is valid at the time of publication.

1.3 Copyright

This document must not be copied, presented, or delivered to a third party without explicit permission from Framery. The use of this document for any purpose other than those allowed by Framery is prohibited. Framery reserves the right to change the instructions related to the product without separate notice.

1.4 Manual contents

The installation instructions contain the following information:

- General information about the purpose and content of the instructions
- Information related to safety
- Installation instructions

1.5 Intended use

The Framery One is a pod intended for short term indoor commercial and household use by one (1) person at a time.

Warning:

WARNING –To reduce the risk of burns, fire, electric shock, or injury to persons:

Use this product only for its intended use as described in the user instructions. Do not use attachments not recommended by the manufacturer.

1.5.1 Non-conventional use

Any use or maintenance of the product that is not specifically allowed in the installation, maintenance, troubleshooting or user instructions is prohibited, including the following:

- Installation, maintenance or disassembly of the pod without reading and understanding the instructions for those actions
- Use of the pod beyond the limits of use
- Making alterations to the pod
- Using the pod in spite of obvious defects or damage
- Using the pod outdoors or in conditions where the temperature or air quality is not safe
- Climbing on top of the product or placing any load on the roof of the product
- Smoking in the pod

1.5.2 Ambient conditions for use

The pod is intended to be used in the following conditions:

- Ambient temperature: +15°C ... +30°C (59°F ... 86°F)
- Humidity: max. 50%
- Sufficient air quality surrounding the product

1.6 Warning, information, and safety symbols in this manual

The warnings in this manual have been divided into the following two categories:

- The term "DANGER" indicates a hazardous situation which, if not avoided, will result in death or serious injury.
- The term “WARNING” indicates a hazardous situation which, if not avoided, could result in death or injury.

The safety symbols found in this manual may also be posted on the product. All personnel who install, disassemble, perform maintenance, or use the product are to be familiar with and observe all safety symbols, labels, and instructions about the action they are performing.

Table 1: Hazard

	An exclamation point symbol inside a colored triangle indicates a hazardous situation.

Table 2: Mandatory action

	A white symbol inside a colored circle indicates an action that must be taken to avoid a hazardous situation.

Table 3: Prohibited action

	A ring with a diagonal bar indicates an action that is not allowed.

1.7 Main safety risks related to the installation, maintenance, disassembly, and use of the product

1.7.1 Installation, maintenance, and disassembly

	WARNING! **To reduce the risk of burns, fire, electric shock, or injury to persons, obey the following:**
	Use cut resistant safety gloves during the installation, maintenance, or disassembly of the product.
	Use steel toed safety boots during the installation, maintenance, or disassembly of the product.
	Read and understand the instructions and plan your work beforehand.
	Obey all local rules and regulations regarding workplace safety.
	Keep the work site tidy and free from debris throughout the installation, maintenance, or disassembly process.
	Do not climb on top of the product or place any load on the roof of the product.
	If the optional casters are not engaged, do not move the finished product by pushing. The product is very heavy. Moving the product after installation without engaging the optional casters is not allowed.

1.7.2 Electrical safety

Input for the electrical system: 100-240 VAC (10 A) 50-60 Hz

The maximum load for the electrical system is 6.6 A.

	DANGER! **To reduce the risk electric shock, obey the following:**
	Disconnect the power cord from the power outlet before starting any cleaning, maintenance, or disassembly procedures. The power cord serves as a power disconnect device for pluggable equipment. The power outlet shall be located near the equipment and shall be easily accessible.
	WARNING! **To reduce the risk of burns, fire, electric shock, or injury to persons, obey the following:**
	Connect the power cord to a properly grounded outlet only.
	This product is for use on a nominal 120-volt circuit and has a grounding plug that looks like the plug illustrated in the figure below. Make sure that the product is connected to an outlet having the same configuration as the plug. No adapter should be used with this product. 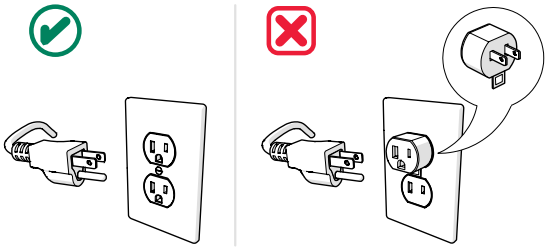
	Keep the power cord of the product away from heated surfaces.
	Do not use the pod if you notice any defects or damage to the electrical equipment.
	Do not connect any extension cords to the power outlet(s) of the product.

1.7.3 Fire safety

	WARNING! **To reduce the risk of burns, fire, electric shock, or injury to persons, obey the following:**

	If safely possible to perform, disconnect the power cord from the power outlet if there is a fire inside the product. The power cord serves as a power disconnect device for pluggable equipment. The power outlet shall be located near the equipment and shall be easily accessible.

Fire safety end devices (alarms, sprinklers etc.) can also be installed inside the pods (instructions available upon request). The need for end devices inside the pod is always determined by the applicable local authorities.

1.7.4 Lifting safety

	WARNING! **To reduce the risk of injury to persons and damage to property, obey the following:**
	Obey all local rules and regulations regarding lifting ergonomics and lifting safety.
	Carefully plan all lifts before hand.
	Keep the work site tidy and free from debris.

1.7.5 Use

Warning:

WARNING –To reduce the risk of burns, fire, electric shock, or injury to persons:

If the product is anticipated to be used in places where children under the age of 8 and people with cognitive disabilities are present, use must be supervised at all times.

The maximum load for the Framery One adjustable table is 50 kg (110 lbs)

The maximum load for the Framery One chair is 136 kg (300 lbs)

	WARNING! **To reduce the risk of burns, fire, electric shock, or injury to persons, obey the following:**
	Read and understand the user instructions before using the product.

	Note: The following statement applies to use in Japan. This equipment is not suitable for use in locations where children are likely to be present.
	Note: The following statements apply to use in all other countries. Close supervision is necessary when this furnishing is used by, or near children, invalids, or disabled persons. Keep children away from extended foot support (or other similar parts).
	Risk of injury! Keep hands and other body parts clear of the side edges of the table when raising or lowering the electrically adjustable table top. This applies to all Framery pods with an electric adjustable table.
	Do not use the product if the surrounding conditions are in any way hazardous; the air circulating inside the pod is derived from the surrounding space.
	Do not use the product if the ventilation is not functioning.
	Do not use the product if the ventilation channels are blocked. Keep the ventilation channels free of lint, hair, and the like.
	Do not use the pod if you notice any defects in the electrical equipment or if the product is not working properly. Disconnect the power cord from the power outlet and contact your local dealer or the manufacturer immediately.
	Do not drop or insert any object into any opening if not specifically instructed to do so in this manual.
	Do not use outdoors.
	Do not use where aerosol (spray) products are being used or where oxygen is being administered.
	Do not climb on top of the product or place any load on the roof of the product.
	Do not lean against the product.

	Do not smoke inside the product.
	Do not obstruct the view through the front and back glasses by posting signs, decorations, or by installing blinds or draperies that would prevent occupants from seeing the visible alarm appliances located in the structure where the pod is installed.

1.7.6 Moving the product on casters (optional)

	WARNING! **The product is very heavy. Moving the product on the casters requires planning and care. Make sure the product cannot tip over while moving.**
	Only move the product on even surfaces: no cracks or thresholds over 3 mm (1/8 in) on the intended route.
	When moving the product, only push below the vertical middle. Do not tow the product.
	Do not enter the product if it is standing on the casters. It is only allowed to use the casters for moving the product. Return the full weight of the product onto the leveling feet immediately after relocation and level the floor.

1.7.7 Radio frequency

Note: This equipment has been tested and found to comply with the limits for a Class B digital device, pursuant to part 15 of the FCC Rules. These limits are designed to provide reasonable protection against harmful interference in a residential installation. This equipment generates, uses and can radiate radio frequency energy and, if not installed and used in accordance with the instructions, may cause harmful interference to radio communications. However, there is no guarantee that interference will not occur in a particular installation. If this equipment does cause harmful interference to radio or television reception, which can be determined by turning the equipment off and on, the user is encouraged to try to correct the interference by one or more of the following measures:

- Reorient or relocate the receiving antenna.
- Increase the separation between the equipment and receiver.
- Connect the equipment into an outlet on a circuit different from that to which the receiver is connected.
- Consult the dealer or an experienced radio/TV technician for help.

Note: Any changes or modifications not expressly approved by Framery Oy could void the user's authority to operate the equipment.

The Control Unit of this Framery Phone Booth is a portable device per FCC 2.093. The FCC labelling and compliance information is electronically available on Control Unit display. The Control Unit is exclusively for use in Framery Phone Booth and not to be integrated to any other device.

The regulatory information can be accessed from the control panel:

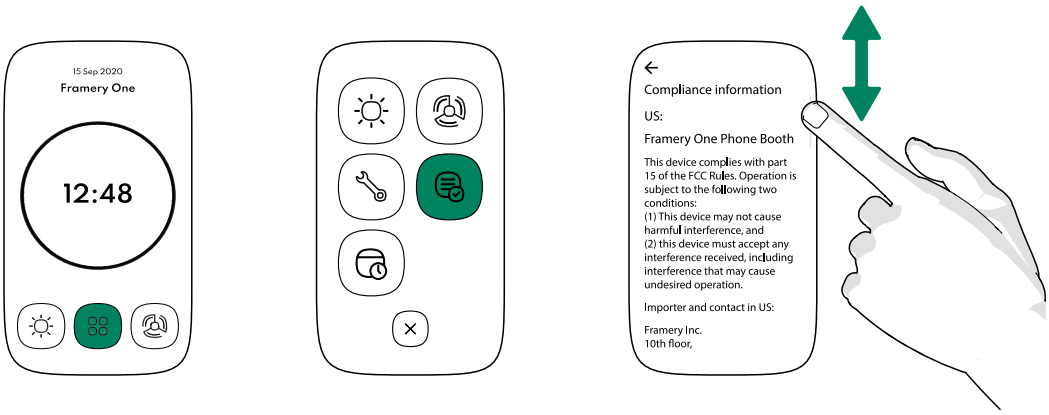

1.8 Location of product markings

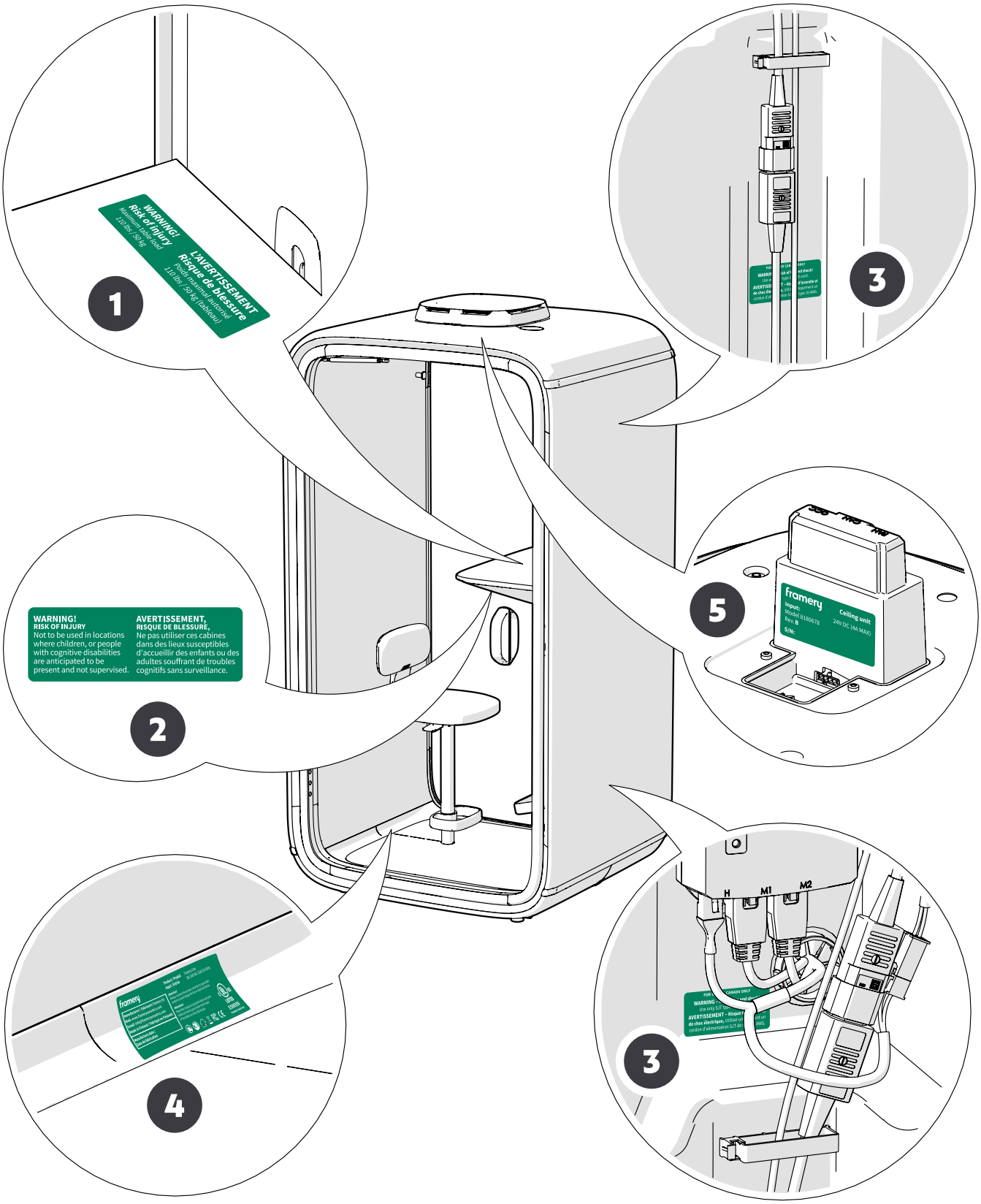

Position	Label	Label text
1.		WARNING! Risk of injury Maximum table load 110 lbs / 50 kg L'AVERTISSEMENT Risque de blessure Poids maximal autorisé 110 lbs / 50 kg (tableau)
2.		WARNING! RISK OF INJURY Not to be used in locations where children, or people with cognitive disabilities are anticipated to be present and not supervised. AVERTISSEMENT, RISQUE DE BLESSURE, Ne pas utiliser ces cabines dans des lieux susceptibles d'accueillir des ensfants ou des adultes souffrant de troubles cognitifs sans surveillance.
3.		FOR US AND CANADA ONLY WARNING - Risk of fire and shock! Use only SJT type 16 AWG cord. AVERTISSEMENT - Risque d'incendie et de choc électrique, Utiliser uniquement un cordon d'alimentation SJT de type 16 AWG.
4.	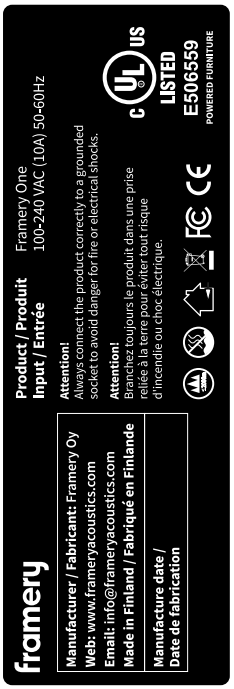	Framery Manufacturer / Fabricant: Framery Oy WEB: www.frameryacoustics.com Email: info@frameryacoustics.com Made in Finland / Fabriqué en Finlande Manufacture date / Date de fabrication Product / Produit Framery One Input / Entrée 100-240 VAC (10 A) 50-60 HZ Attention! Always connect the product correctly to a grounded socket to avoid danger for fire or electrical shocks. Attention! Branchez toujours le produit dans une prise reliée à la terre pour éviter tout risque d'incendie ou choc électrique.

Position	Label	Label text
5.		Framery Ceiling unit Input: 24V DC (4A MAX) Model 8180678 Rev. B S/N:

SAVE THESE INSTRUCTIONS

2 Installation requirements

2.1 Tools and accessories

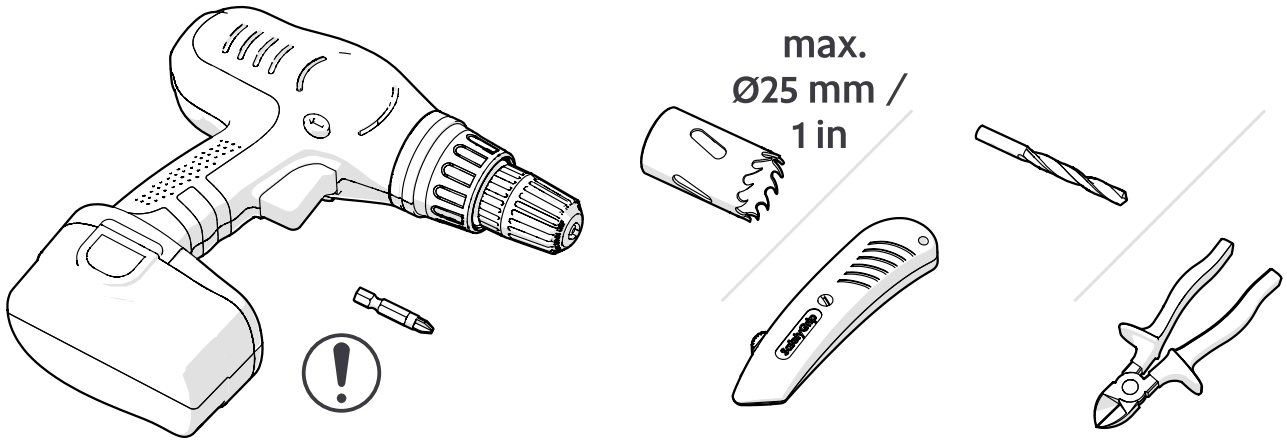

Figure 1: Tools for installing the wired alarm devices

Note: The size of the screw bit depends on the screws on the wired device.

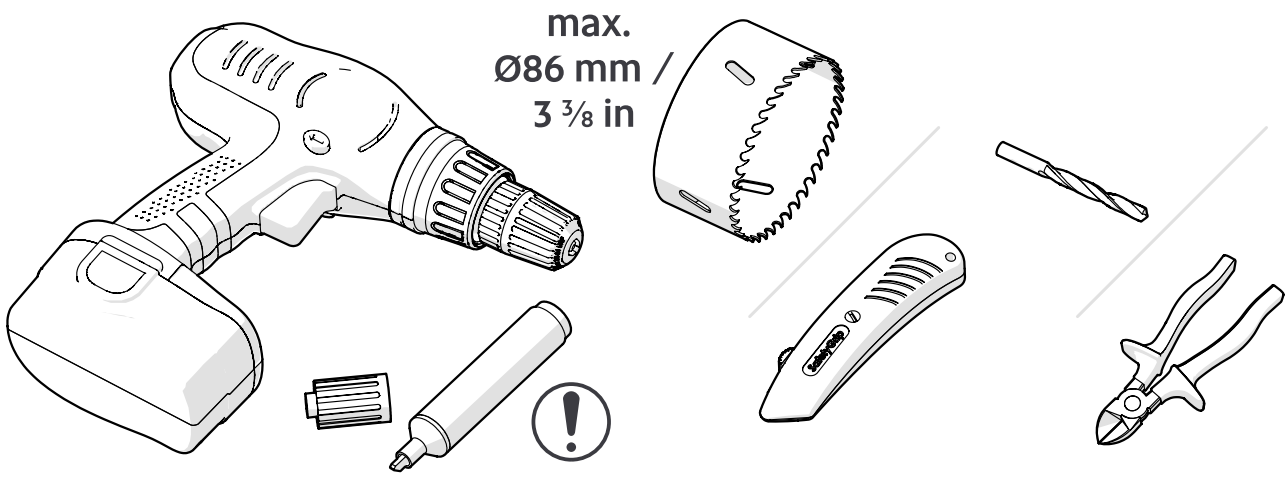

Figure 2: Tools for installing the sprinkler

Note: Use a permanent marker.

2.2 Installation dimensions

You can install a wireless or wired alarm. Install the fire alarm onto the ceiling felt either at the back or at the front of the pod.

If you intend to install a wired alarm, follow these instructions.

The installation areas at the back and the front the pod are approx. 150 mm (4 7/8 in) from the side walls towards the center of the pod and 20 mm (¾ in) from the back of the pod at the straight portion of the ceiling felt.

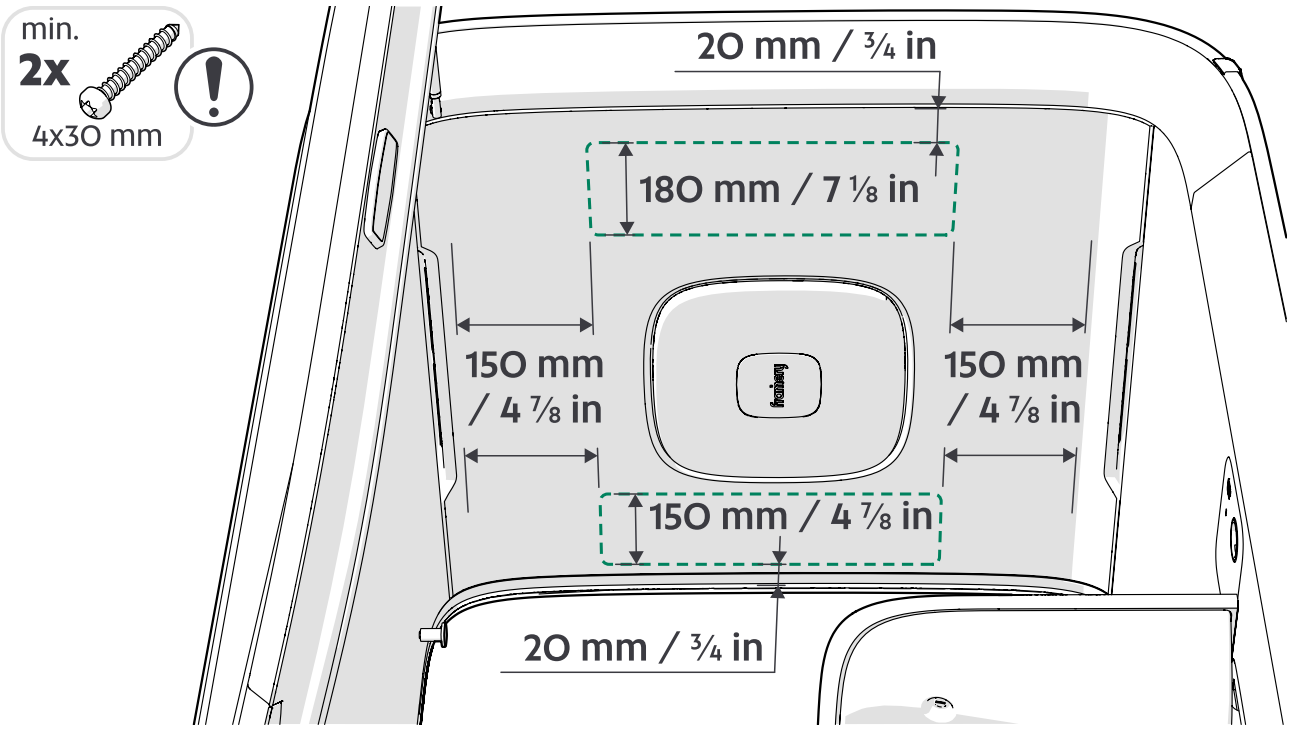

Note: The maximum recommended screw size is 4x30.

Note: The minimum recommended number of screws is two (2 pcs).

3 Disconnect the power cord

⚠ **DANGER:** Always disconnect the pod from the power outlet before you begin disassembly, maintenance, moving, or any other procedure.

Remove the plug from the power outlet.

If equipped with the optional LAN, also disconnect the LAN cord from the outlet.

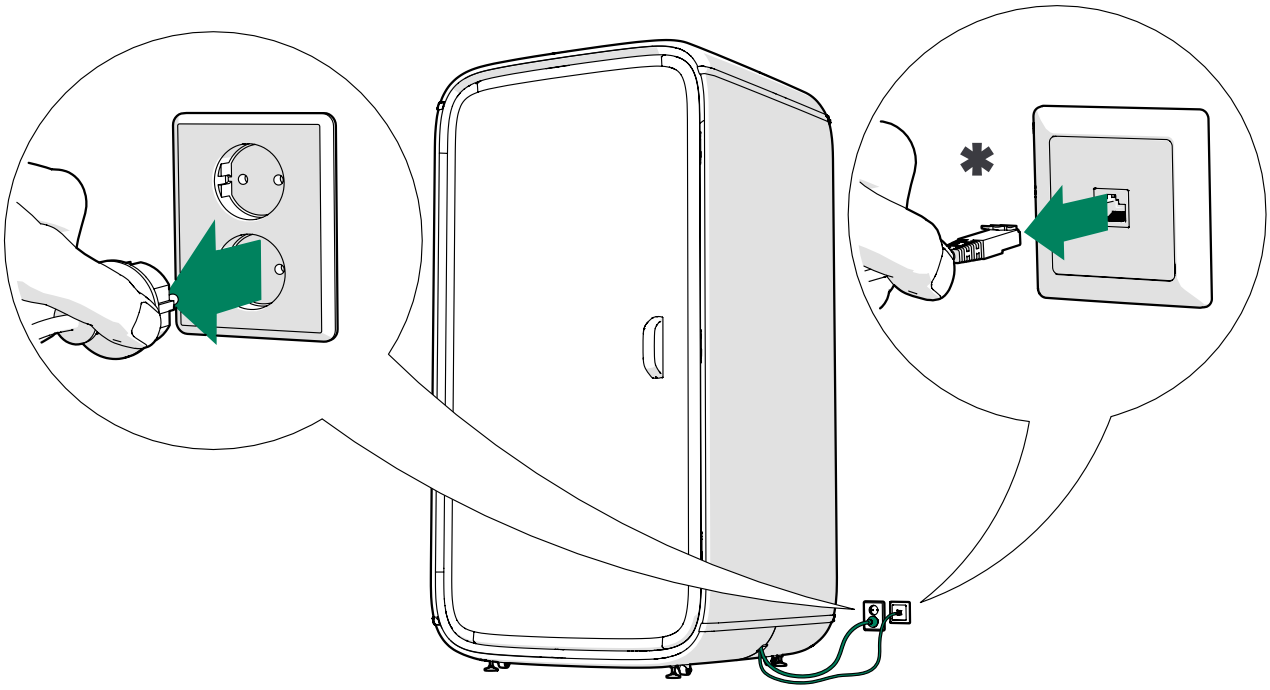

Figure 3: * = Optional LAN cord

4 Disassemble the necessary parts

4.1 Remove the wall body covers

Save all removed parts and set them aside carefully and neatly. All removed parts will be needed for reassembly.

1. Remove the fan cover.

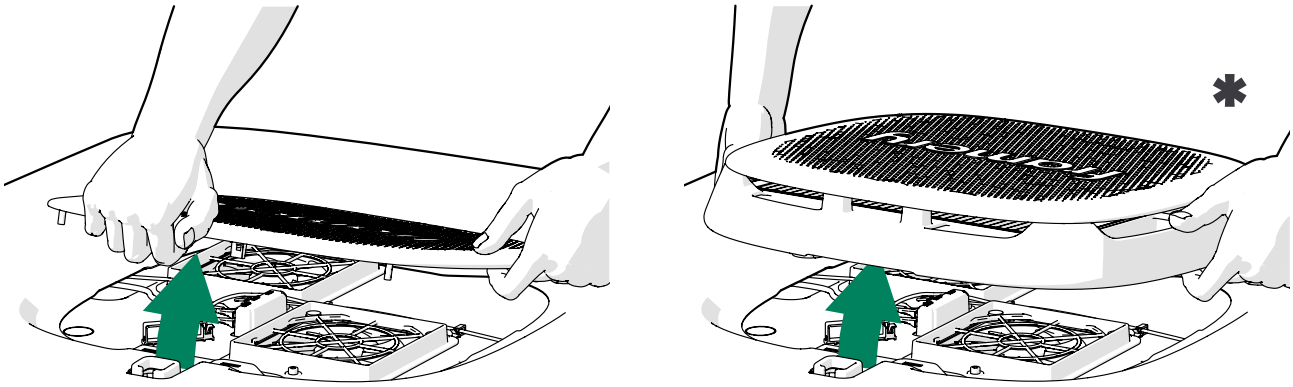

Figure 4: * = With optional activated carbon filter

2. Remove the plastic trims.

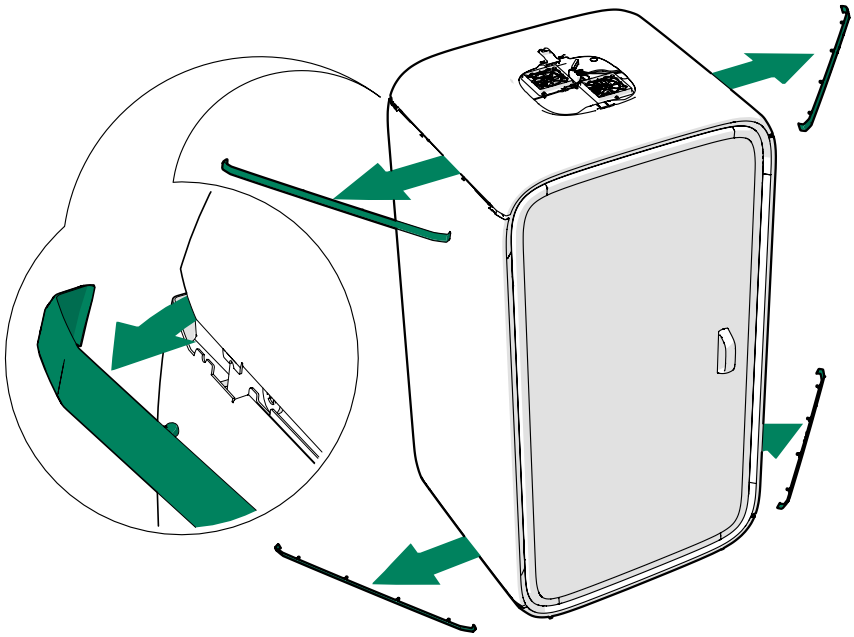

3. Remove the roof body cover.

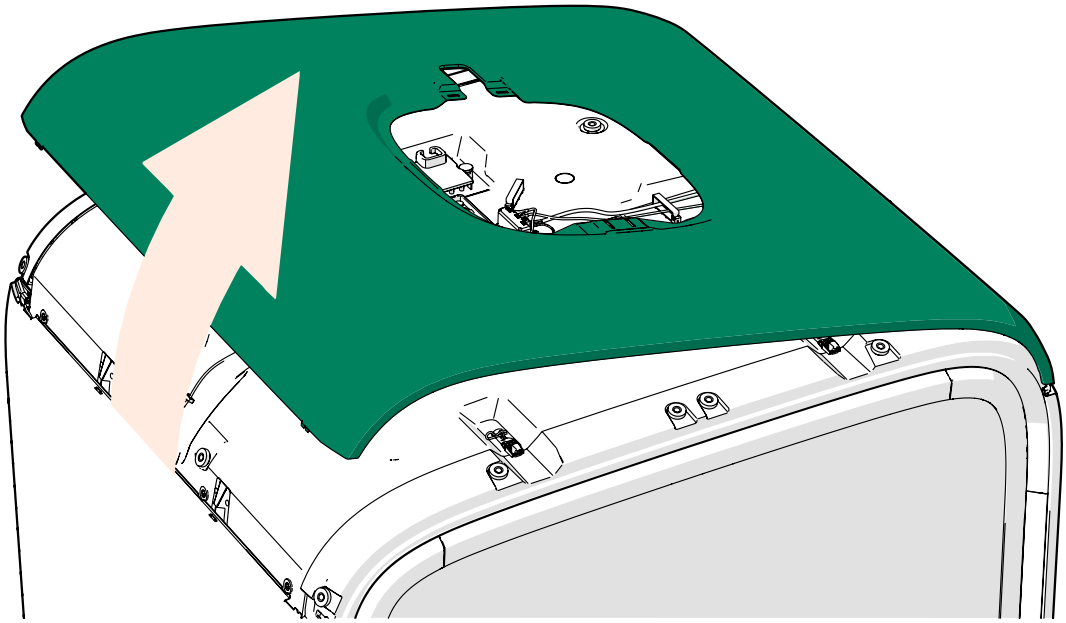

4. Remove the wall body covers.

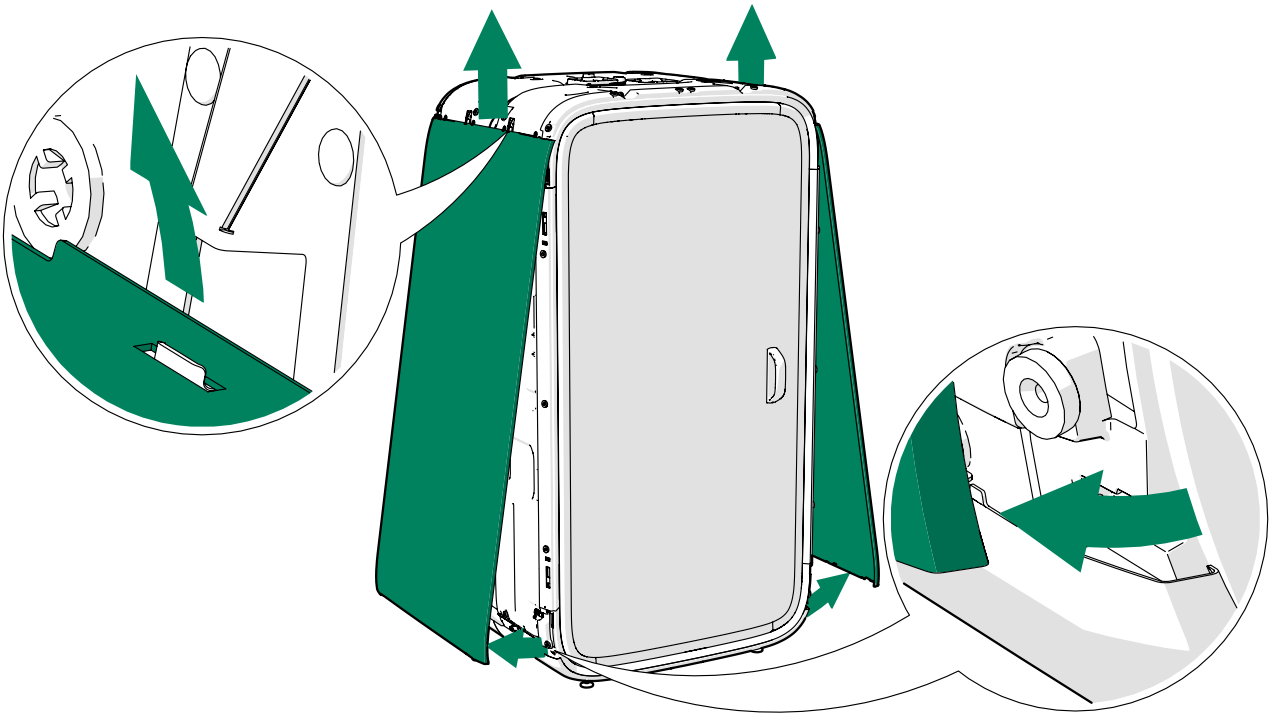

5. Remove the front floor body cover.

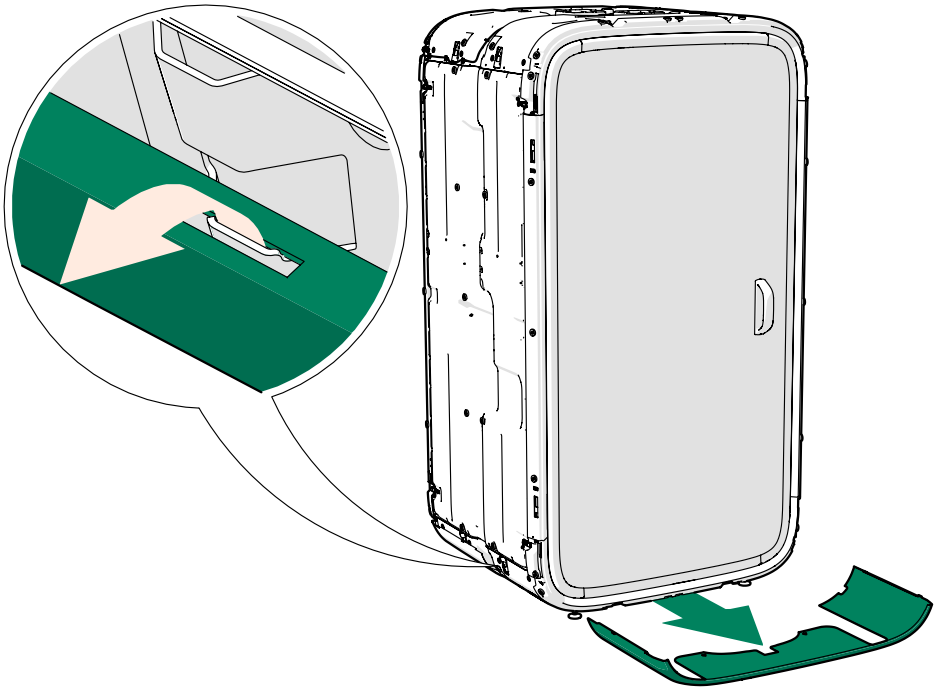

6. Remove the back floor body cover.

4.2 Remove the electrical connections from the roof

Save all removed parts and set them aside carefully and neatly. All removed parts will be needed for reassembly.

1. Remove the strain relief from the roof.

   Note: If the power cord is installed to the roof module, disconnect the power cord from the extension cord.

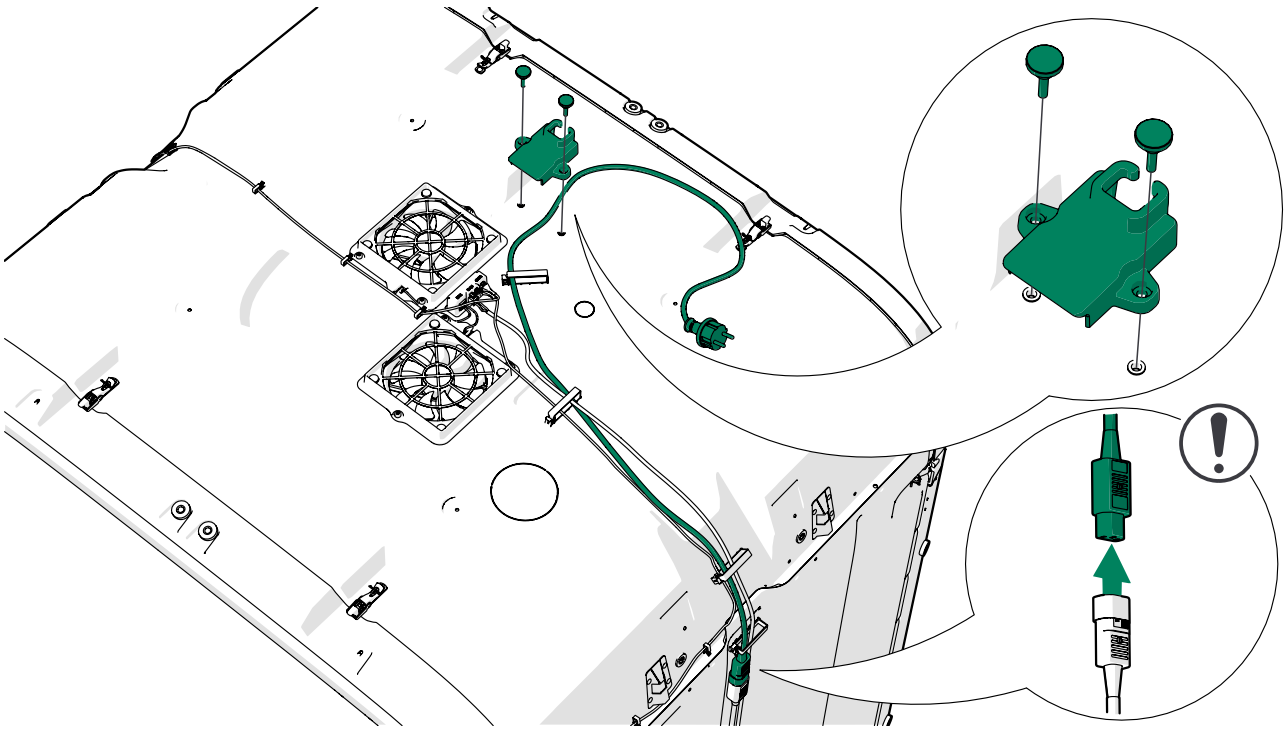

2. Disconnect the occupancy indicator light cord from the control hub.

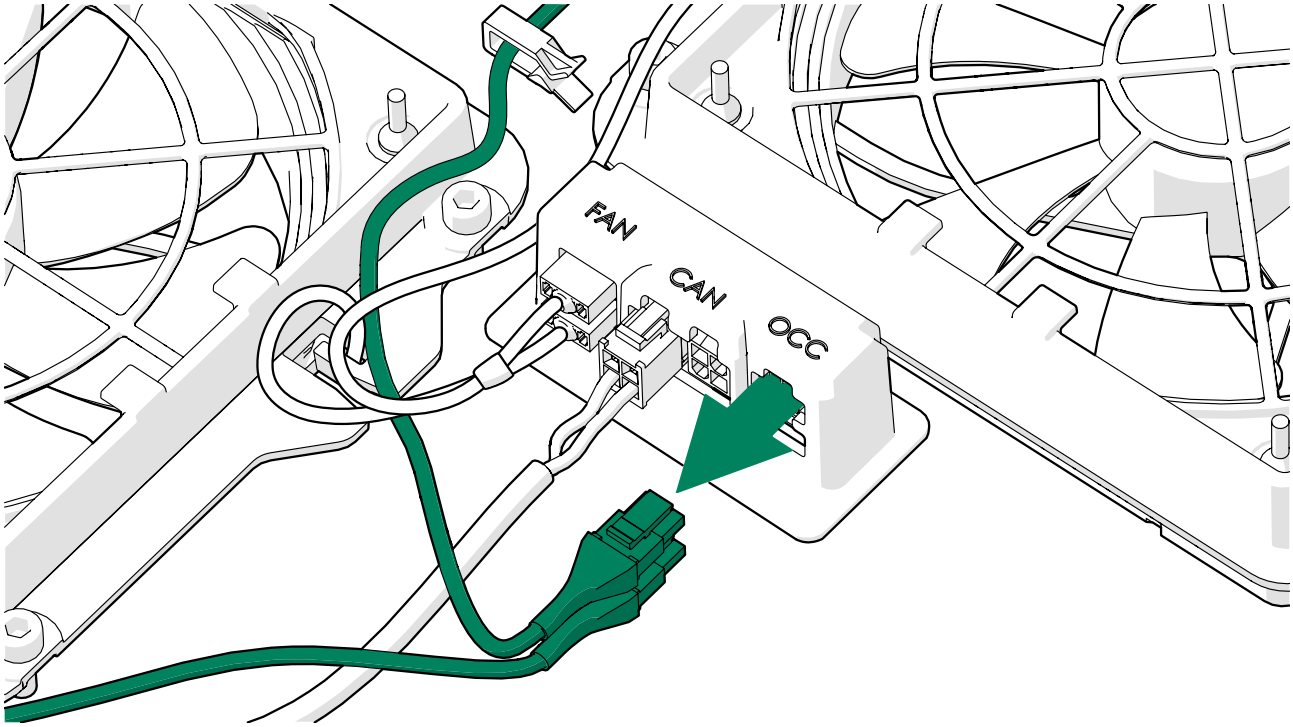

3. Remove the occupancy indicator lights from the back of the pod, if installed (max. 2 pcs).

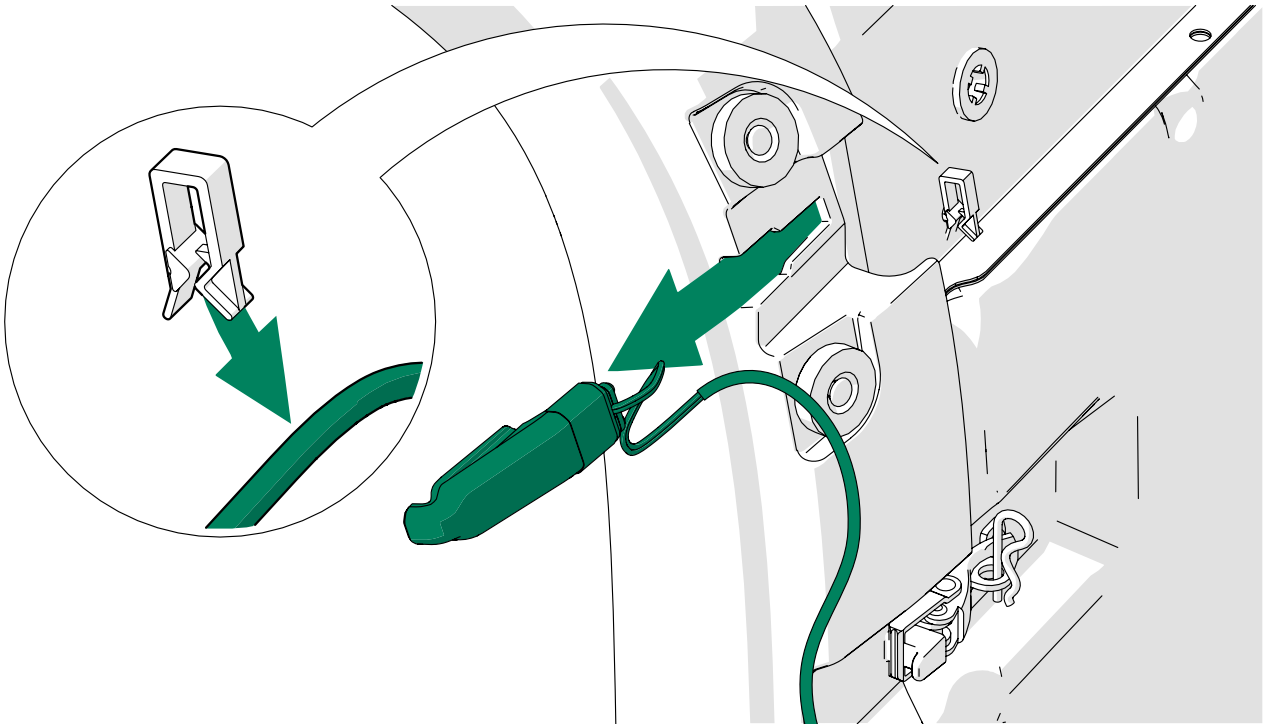

4. Disconnect the fan cords from the control hub.

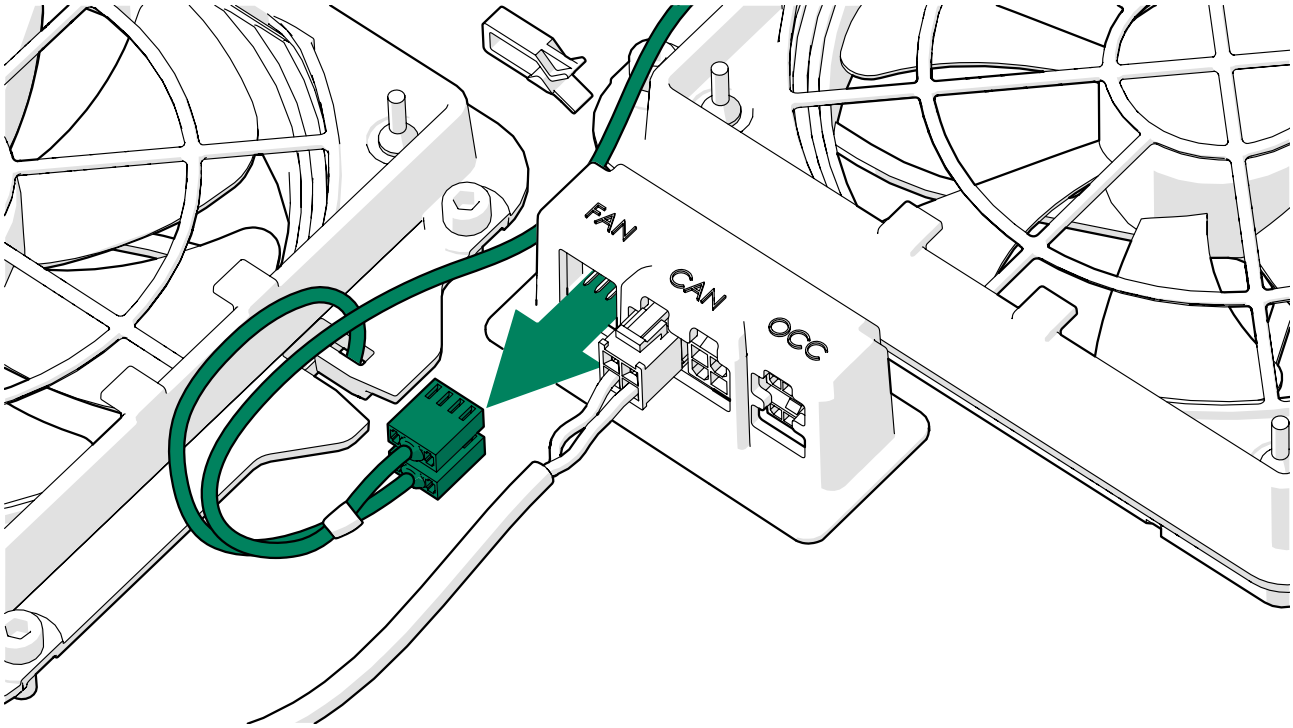

5. Disconnect the long CAN cord from the control hub.

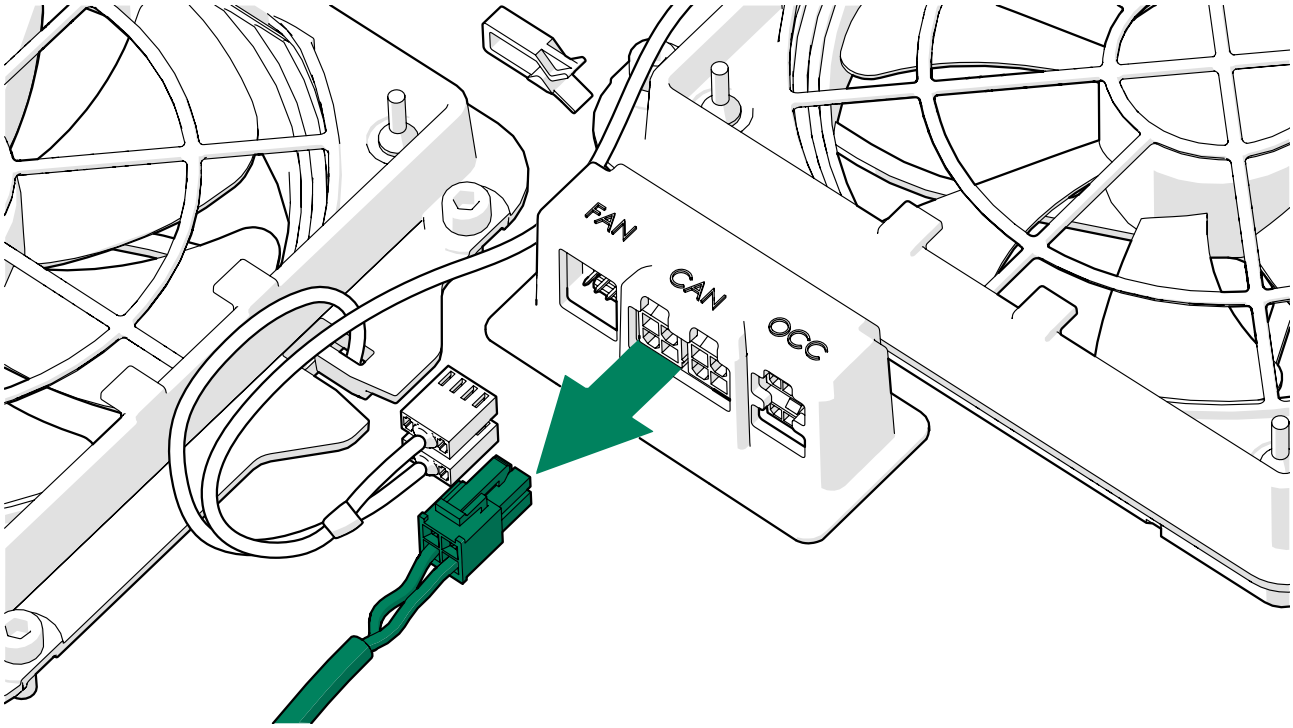

6. Lead the long CAN cord down to the power unit.

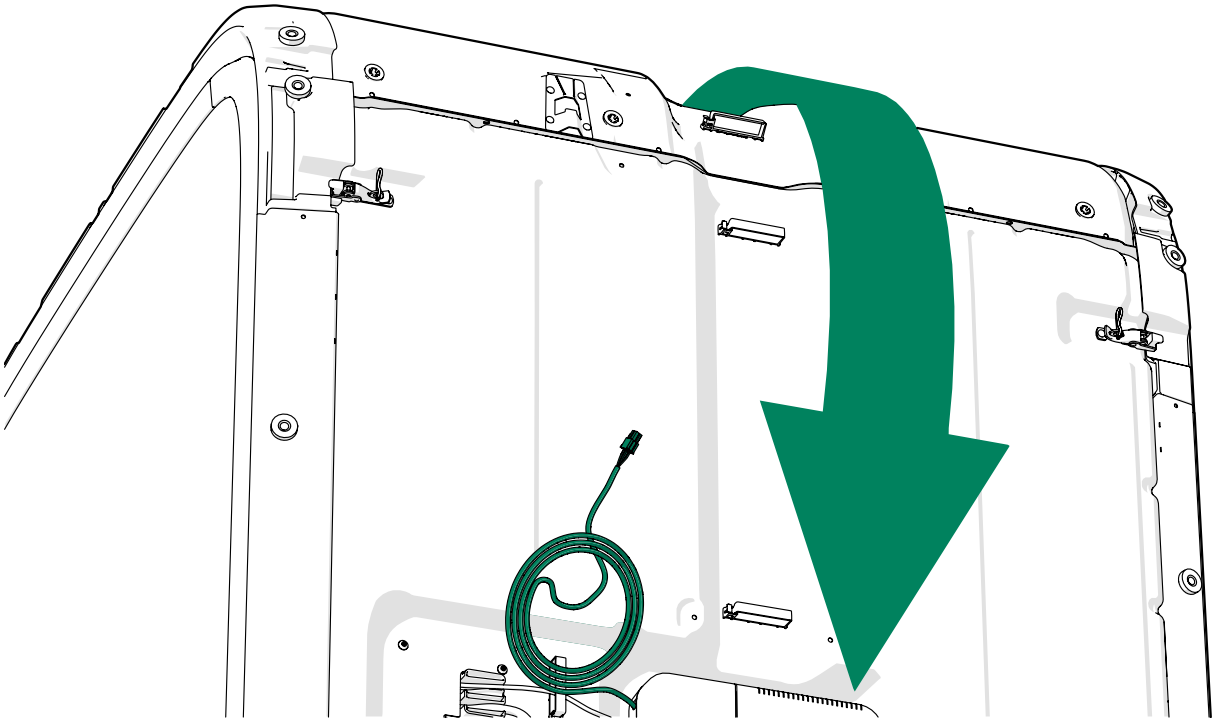

7. Remove the light with the control hub from the ceiling.

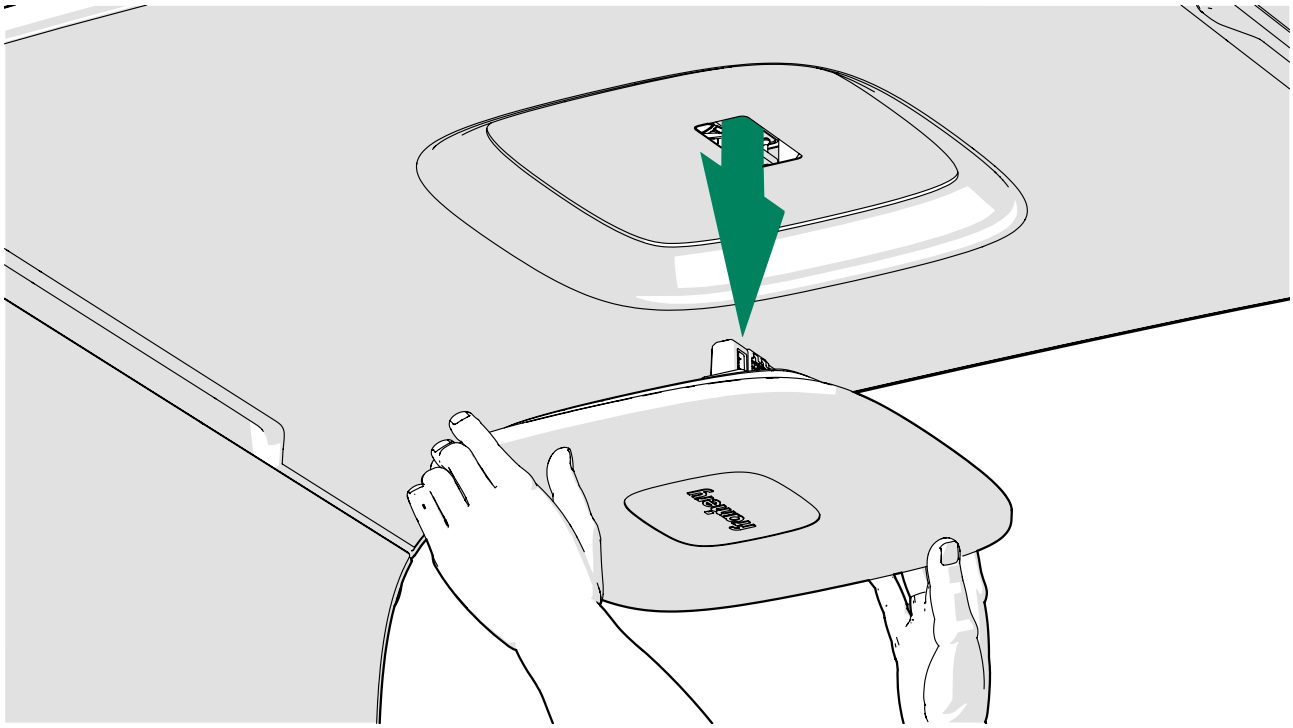

4.3 Remove the glass wall

Save all removed parts and set them aside carefully and neatly. All removed parts will be needed for reassembly.

1. Lay a carpet on the floor behind the pod.

   Note: The carpet is needed to protect the frame from scratches.

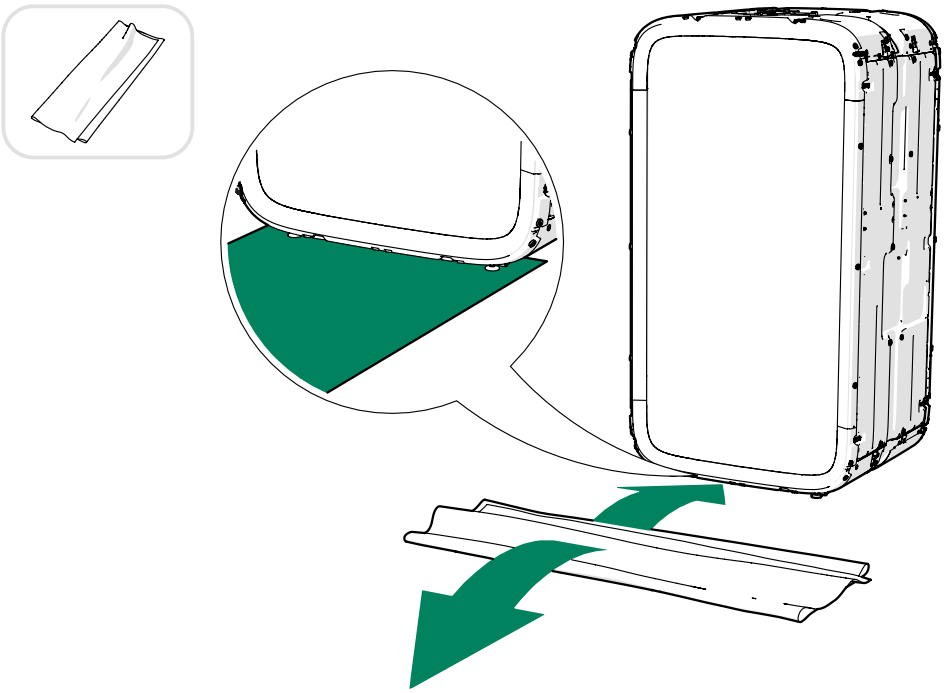

2. Remove the pins (6 pcs) and open the latches (6 pcs) around the glass wall.

   Note: Support the glass wall while opening the latches.

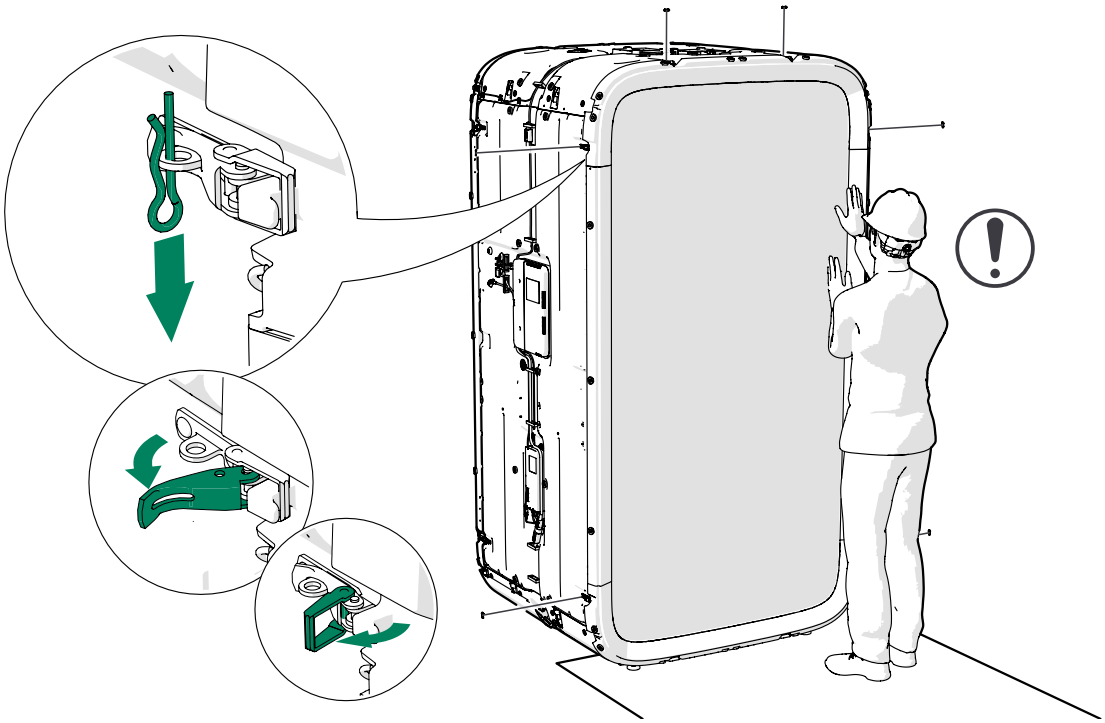

3. Carefully lower the glass wall onto the carpet.

   Note: Make sure that the guide pin at the upper edge of the frame stays in place.

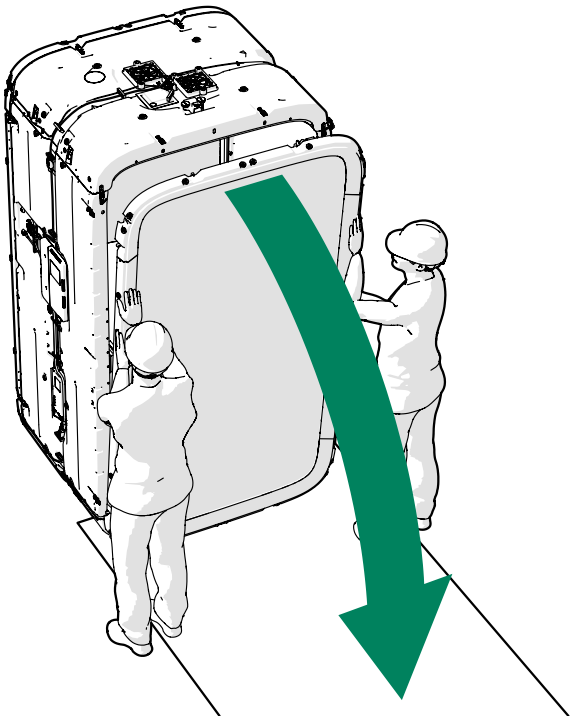

4. Remove the guide pin from the frame.

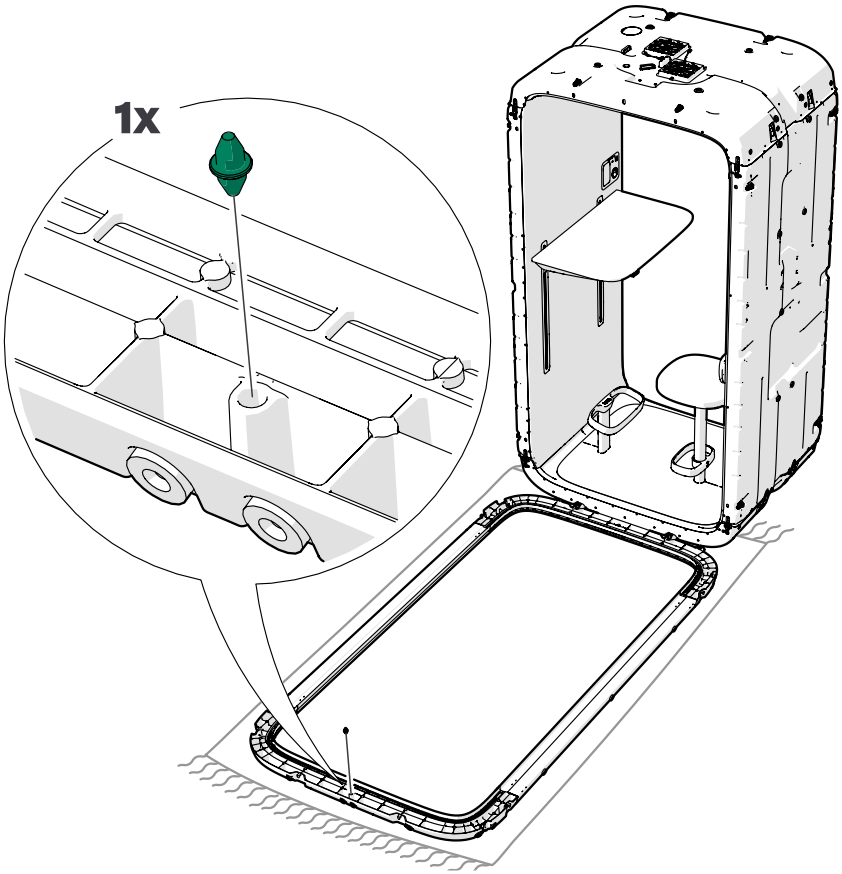

4.4 Remove the front frame and door

Save all removed parts and set them aside carefully and neatly. All removed parts will be needed for reassembly.

1. Remove the door handle from the outside of the door.
   Loosen the set screw to remove the handle.

   Note: Do not remove the set screw.

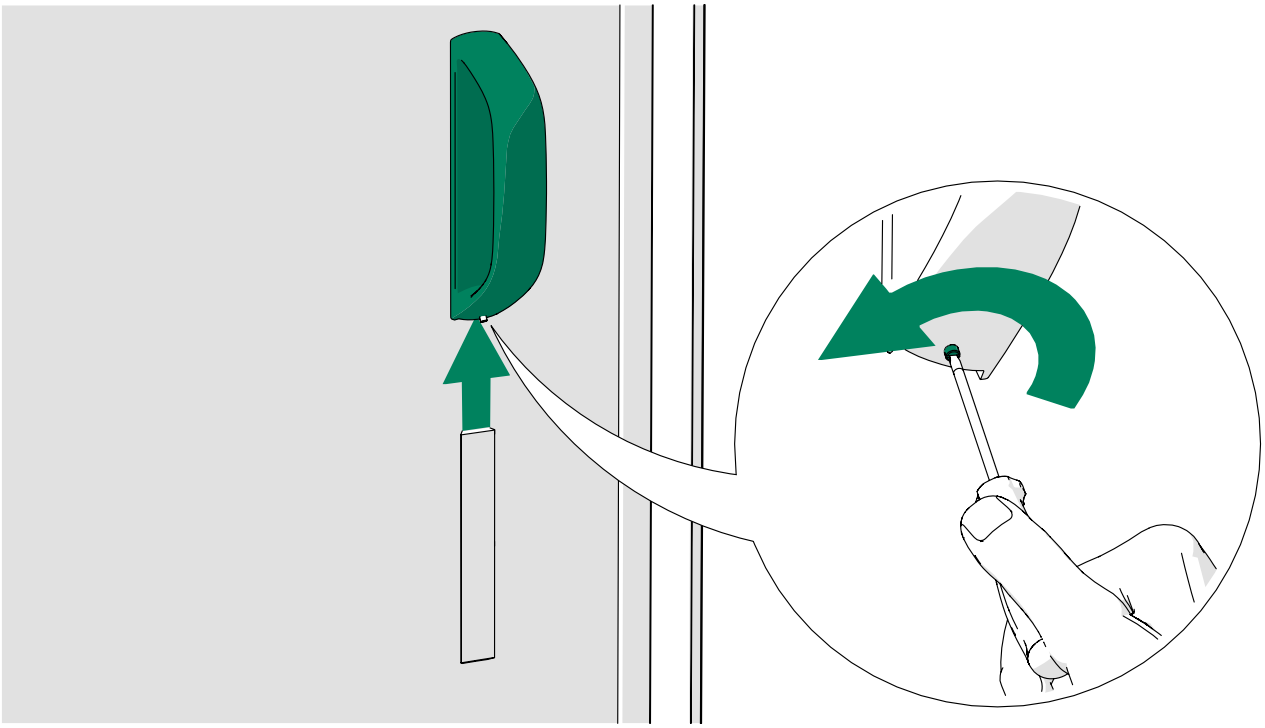

2. Install the door brace.

   Warning: Risk of injury or damage to property. Make sure that the door brace is in place before detaching the front frame with the door.

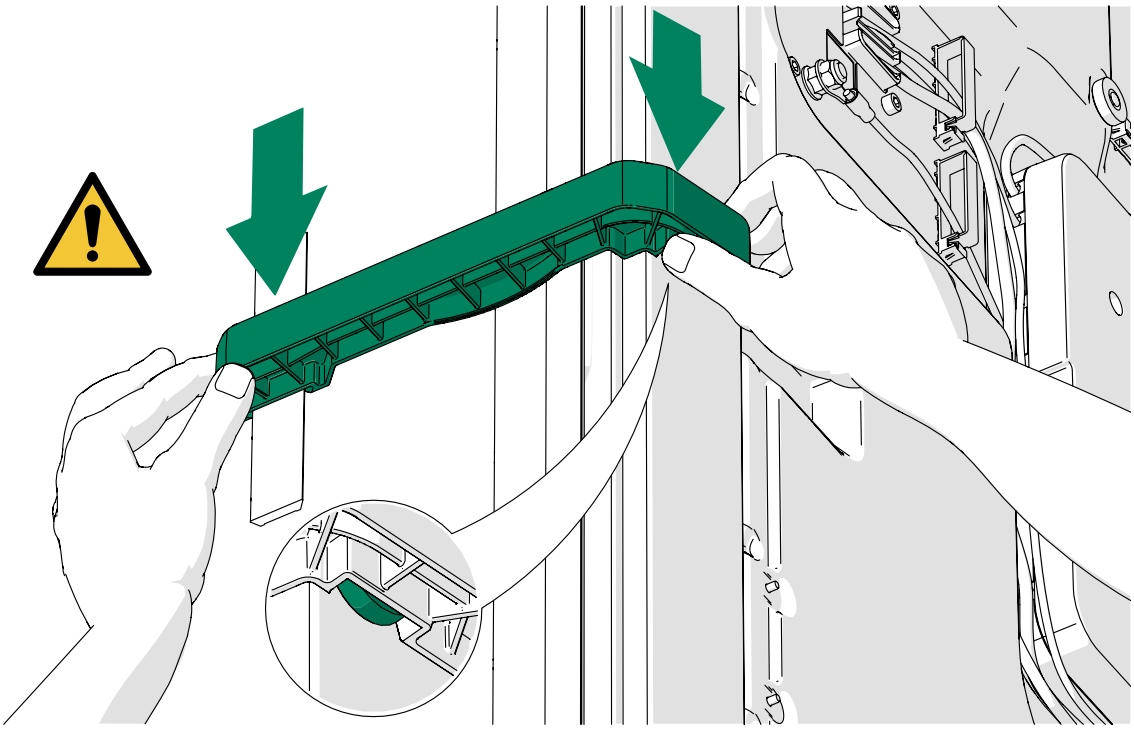

3. Lay a carpet on the floor in front of the pod.

Note: The carpet is needed to protect the frame from scratches.

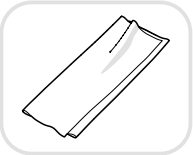

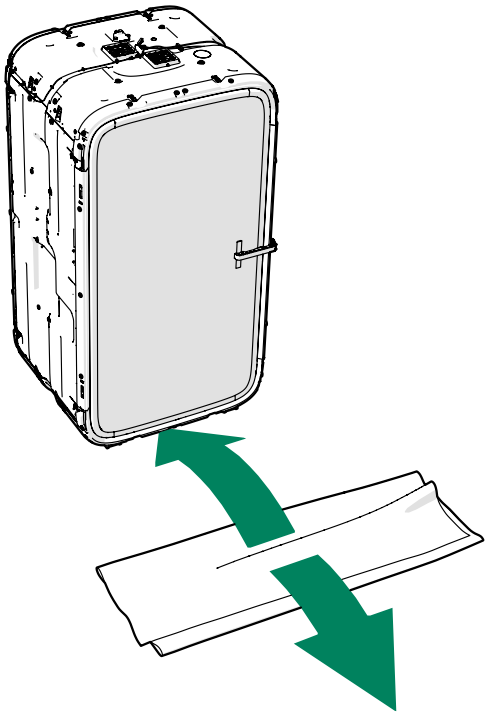

4. Remove the pins (6 pcs) and open the latches (6 pcs) around the front frame.

Note: Support the frame while opening the latches.

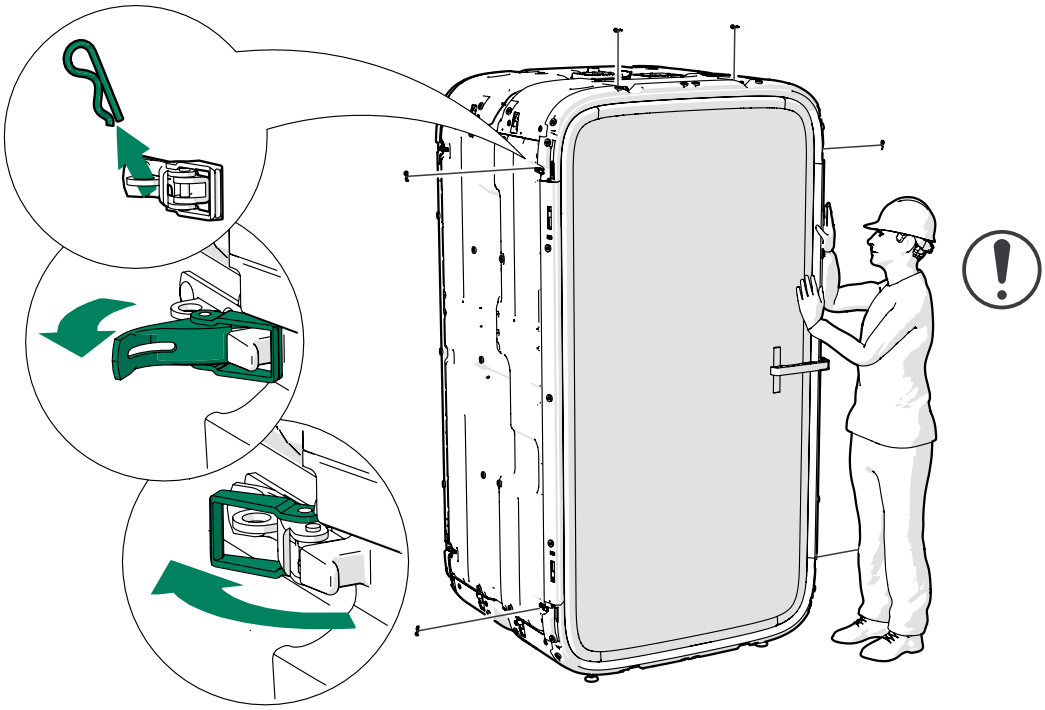

5. Carefully lower the front frame with door onto the carpet.

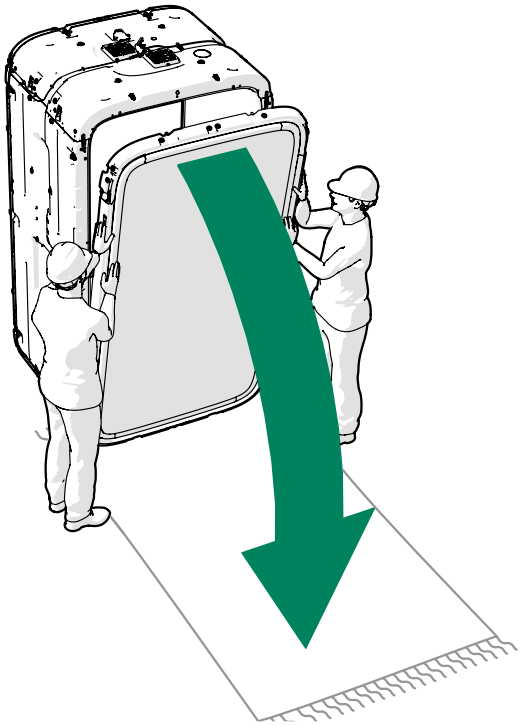

4.5 Remove the roof

1. Remove the pins (4 pcs) and open the latches (4 pcs) around the roof.

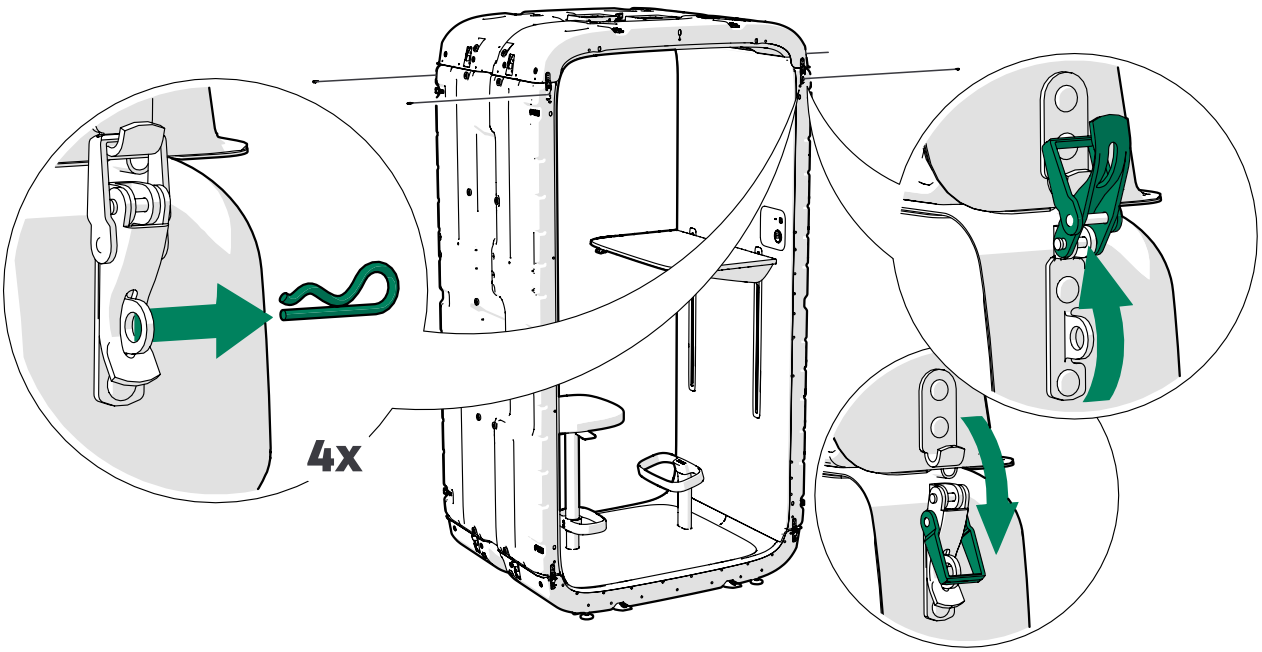

2. Carefully lift the roof down.

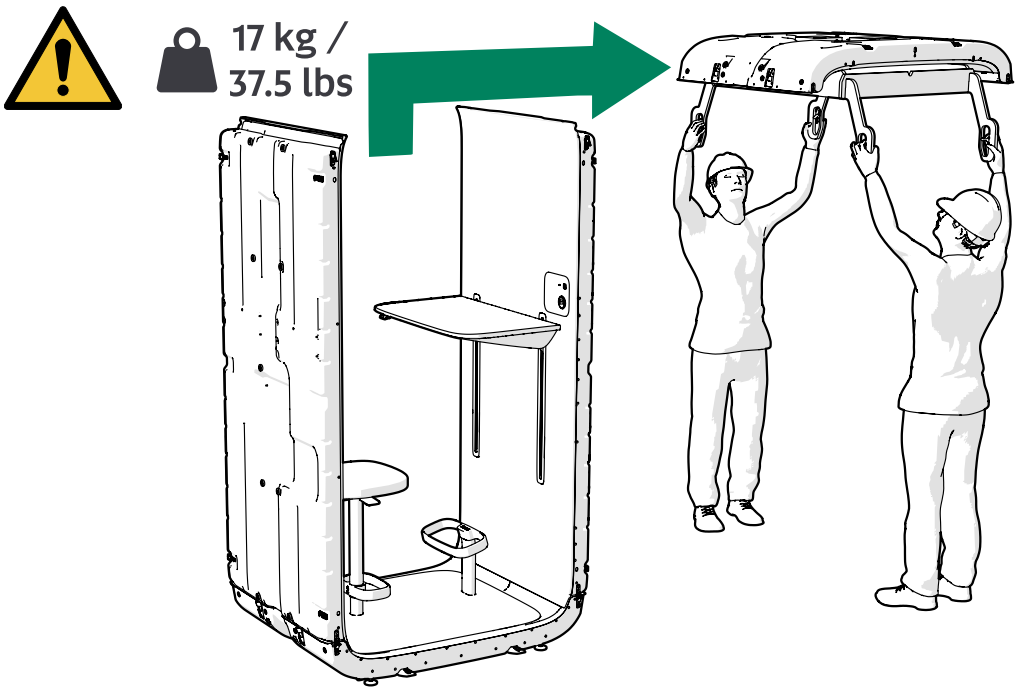

3. Remove the roof module from the lifting supports and place the roof module on the floor.

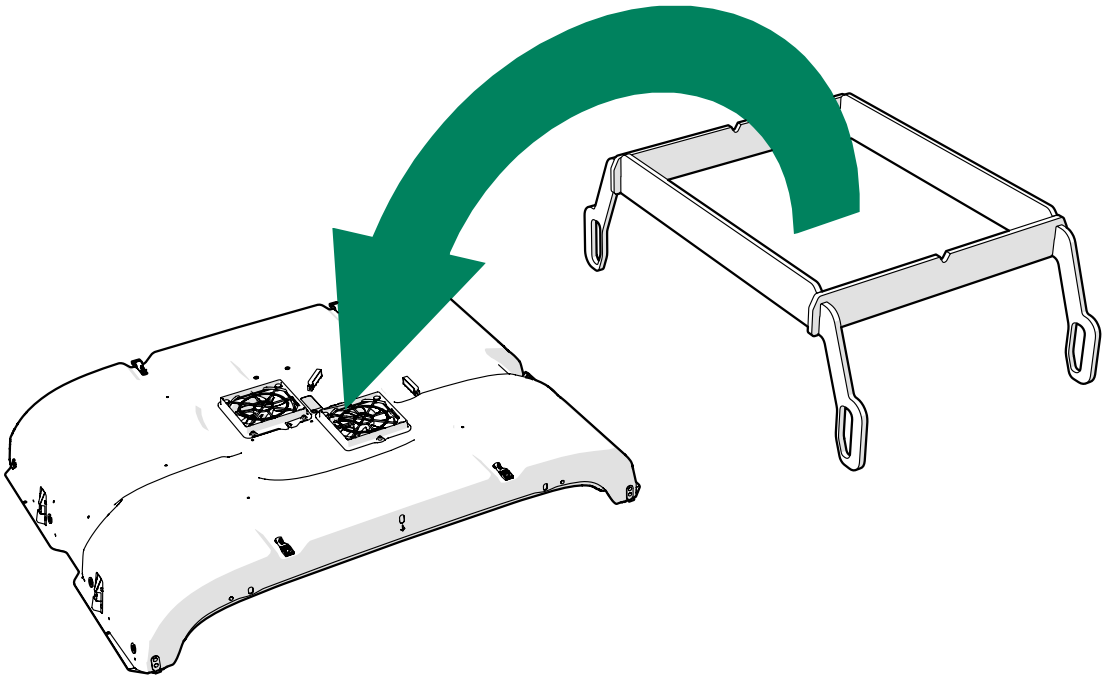

5 Install the wired alarm device

5.1 Prepare the installation of the wired alarm device

1. Cut away the flap on the roof. Use side cutters or a drill.

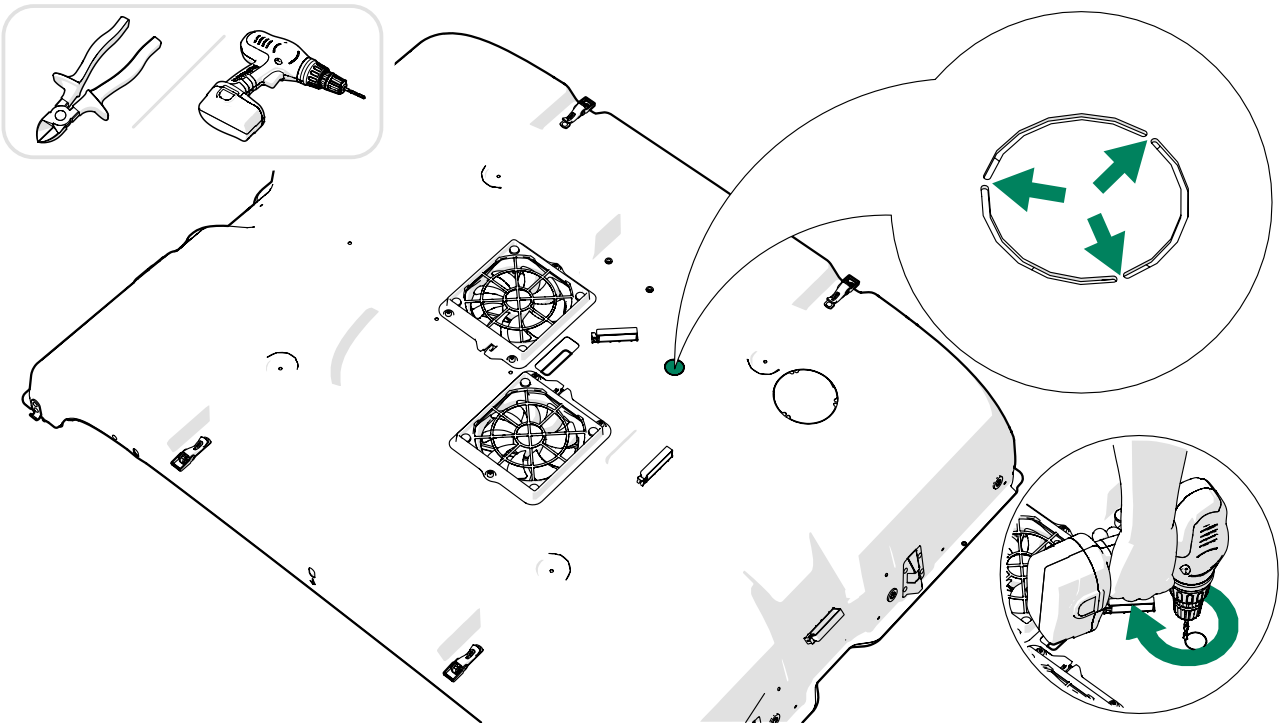

2. Cut away the acoustic material. Use a utility knife or a hole saw.

   Note: Do not cut through the roof.

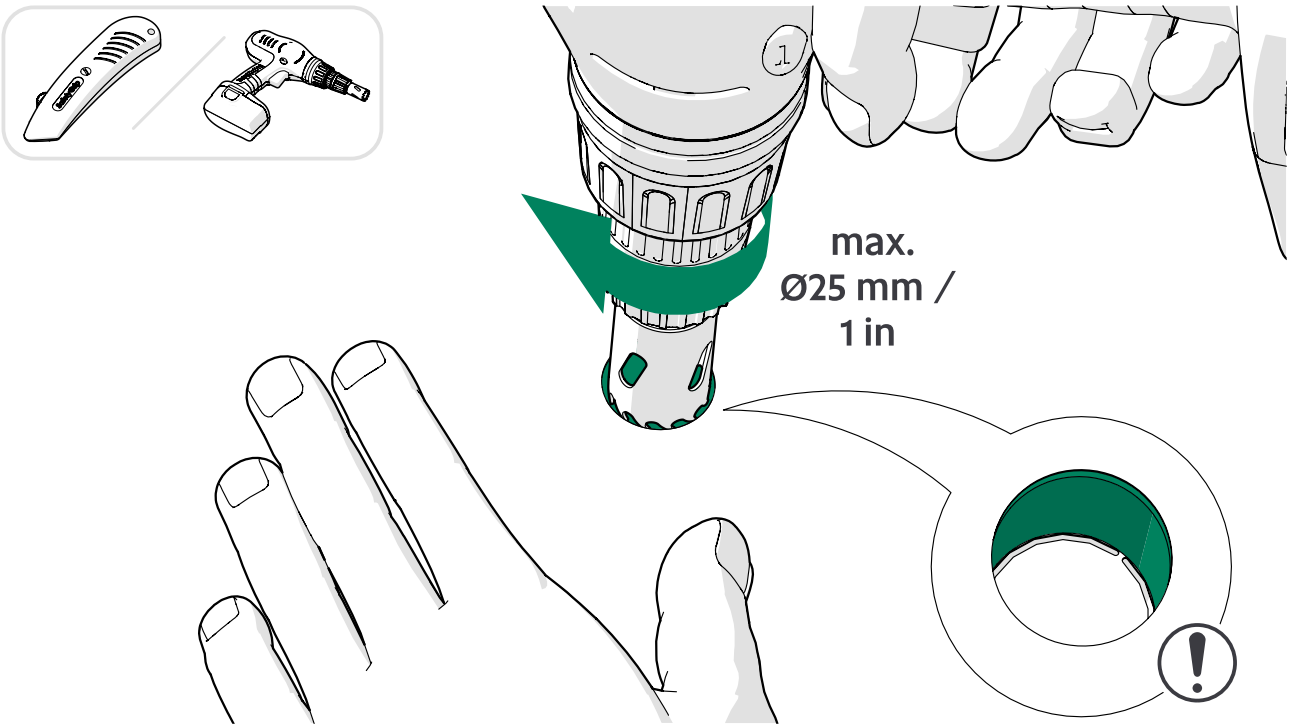

3. Cut away the flap on the roof under the acoustic material. Use side cutters or a drill.

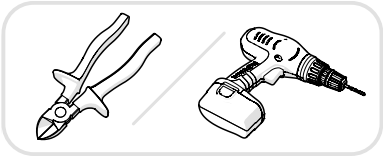

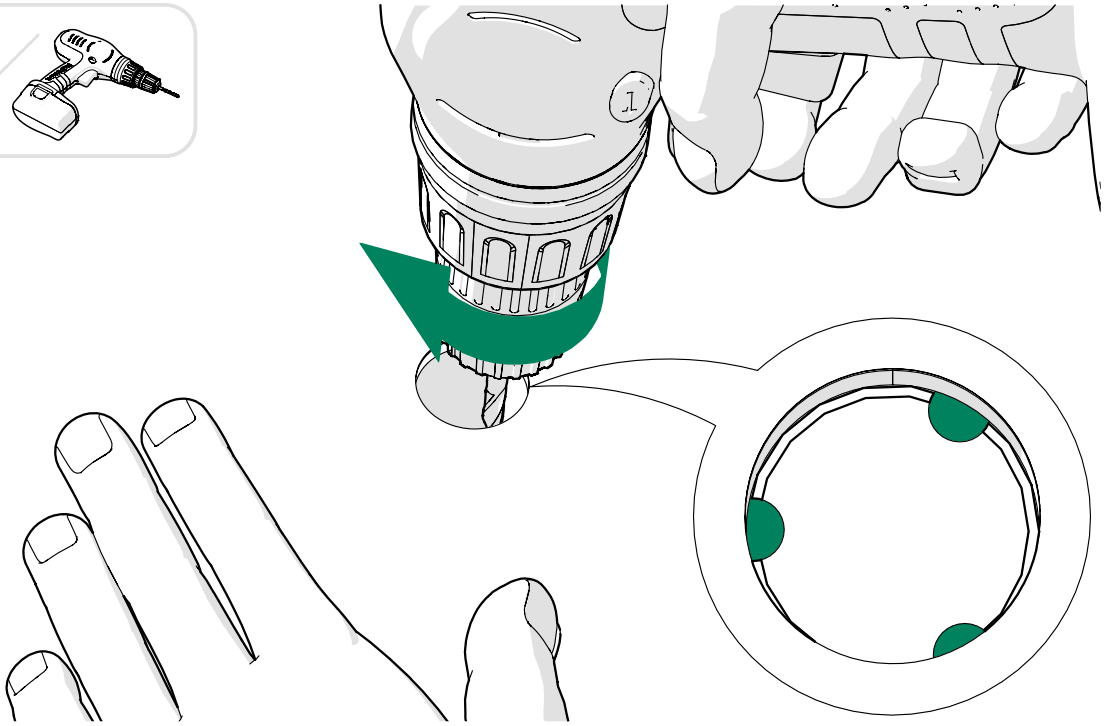

4. Remove the flap.

Note: If you cannot remove the flap from outside, remove it from the roof from inside.

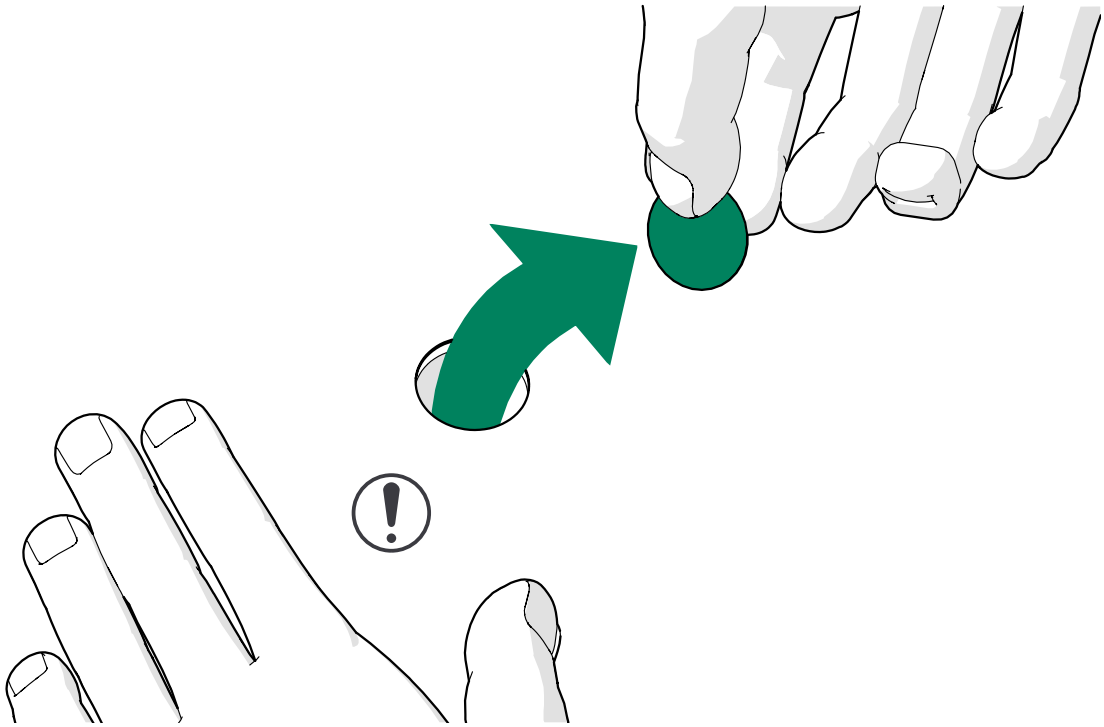

5. Flip the roof upside down.

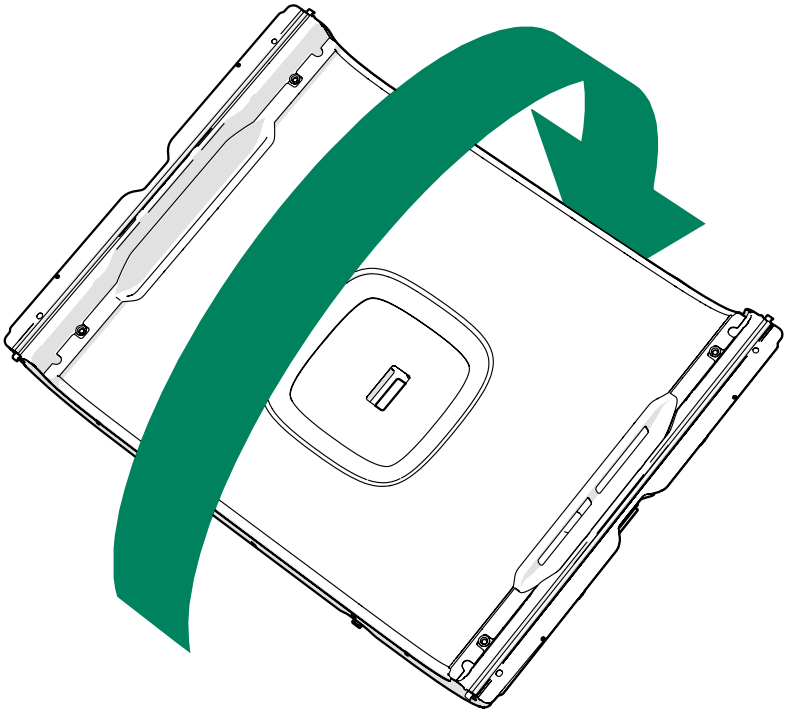

5.2 Install the wired alarm device

1. Drill a hole onto to the ceiling panel from inside the pod. Use a hole saw.
   The size of the installation areas for a wireless alarm is 150 mm x 20 mm (4 7/8 in x 3/4 in) at the center front and back of the roof module.

   Note: The ceiling is shown with the frontside of the pod upwards.

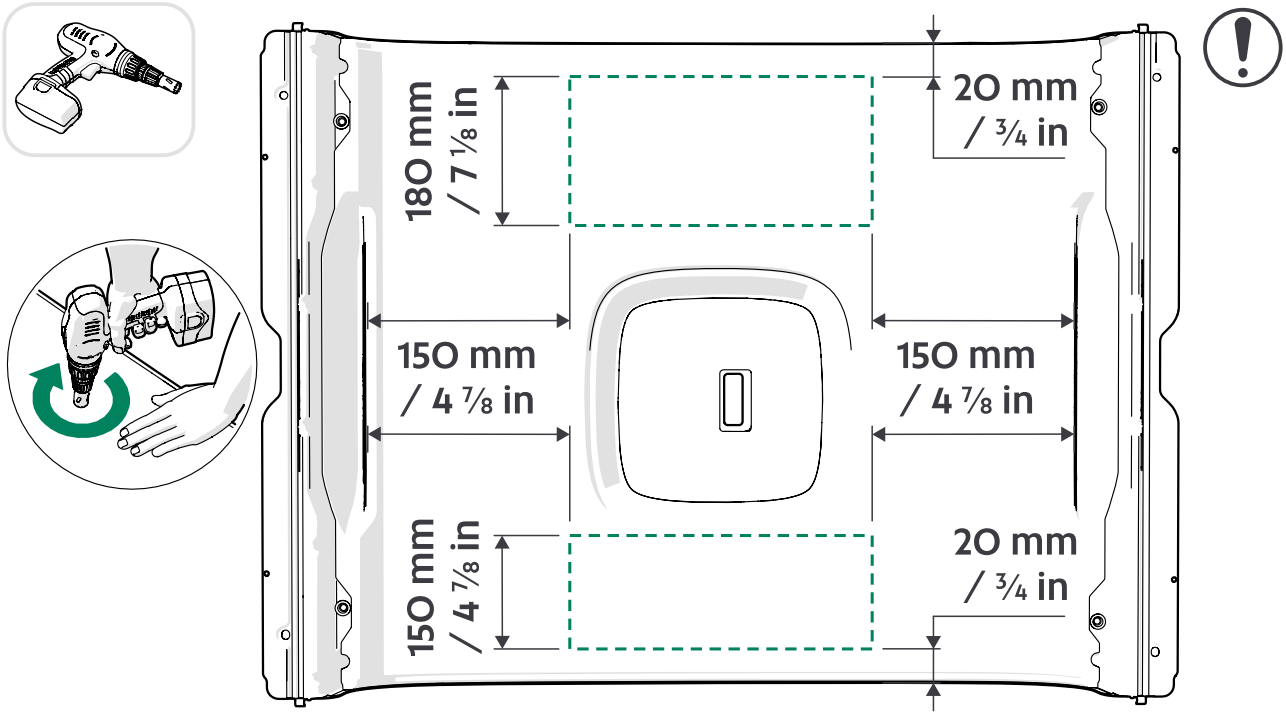

Fire Safety
info@frameryacoustics.com

2. Guide the wire through the hole to the roof.

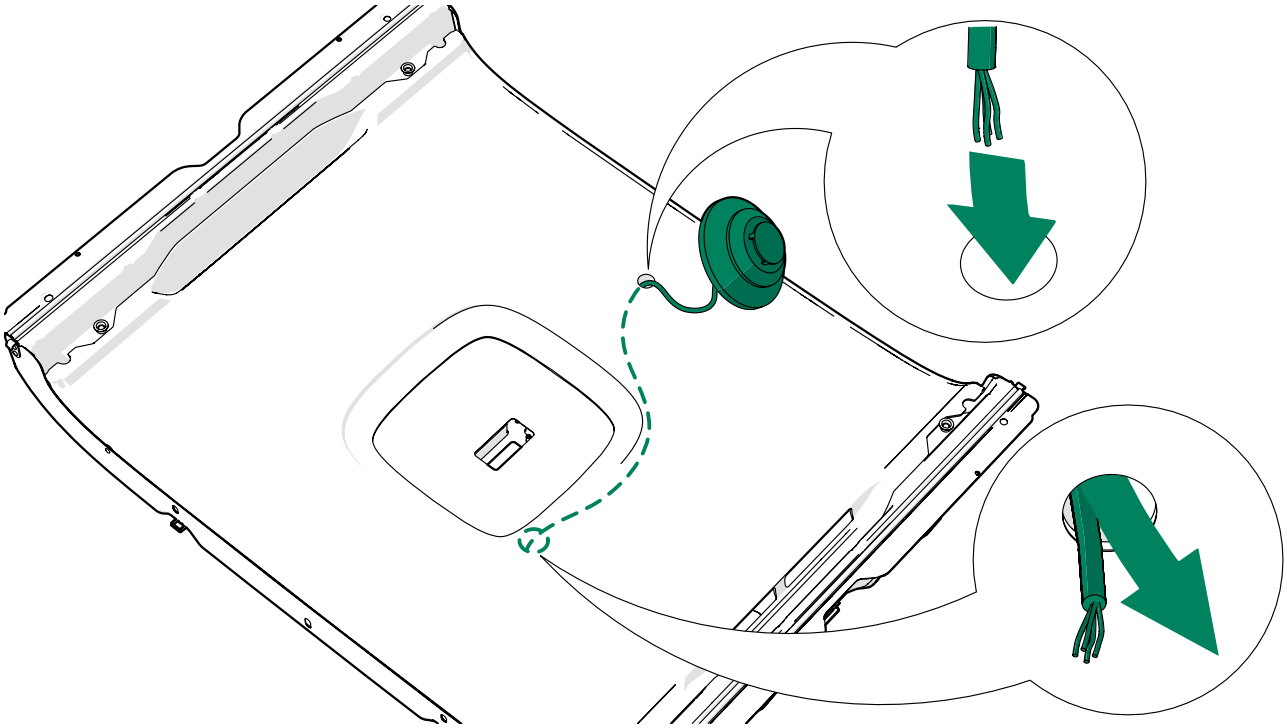

3. Install the wired alarm device to the ceiling panel with 4x30 screws (min. 2 pcs).

Note: Make sure that the wire is not pinched between the device and the ceiling.

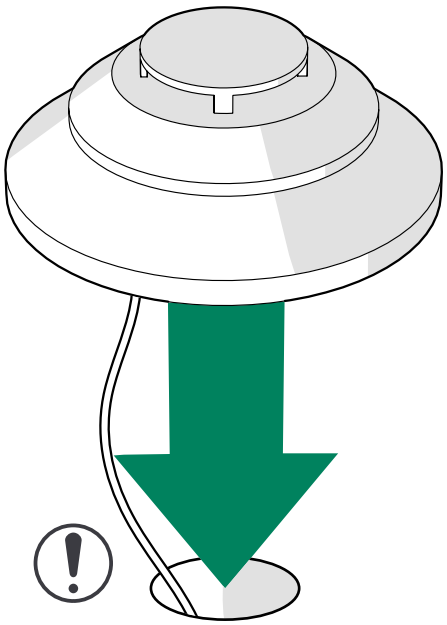

6 Install the fire suppression system

6.1 Install the fire suppression system

1. Cut away the flap on the roof body cover. Use side cutters or a drill.

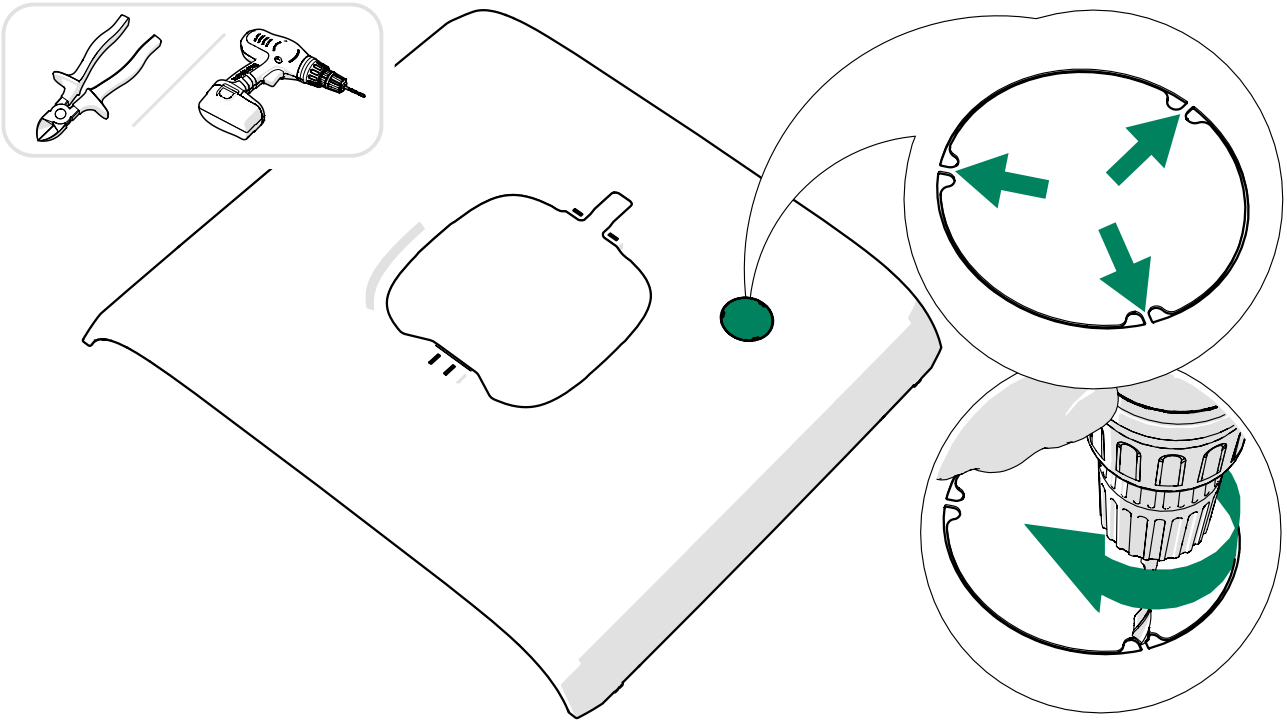

2. Cut away the flap on the roof . Use side cutters or a drill.

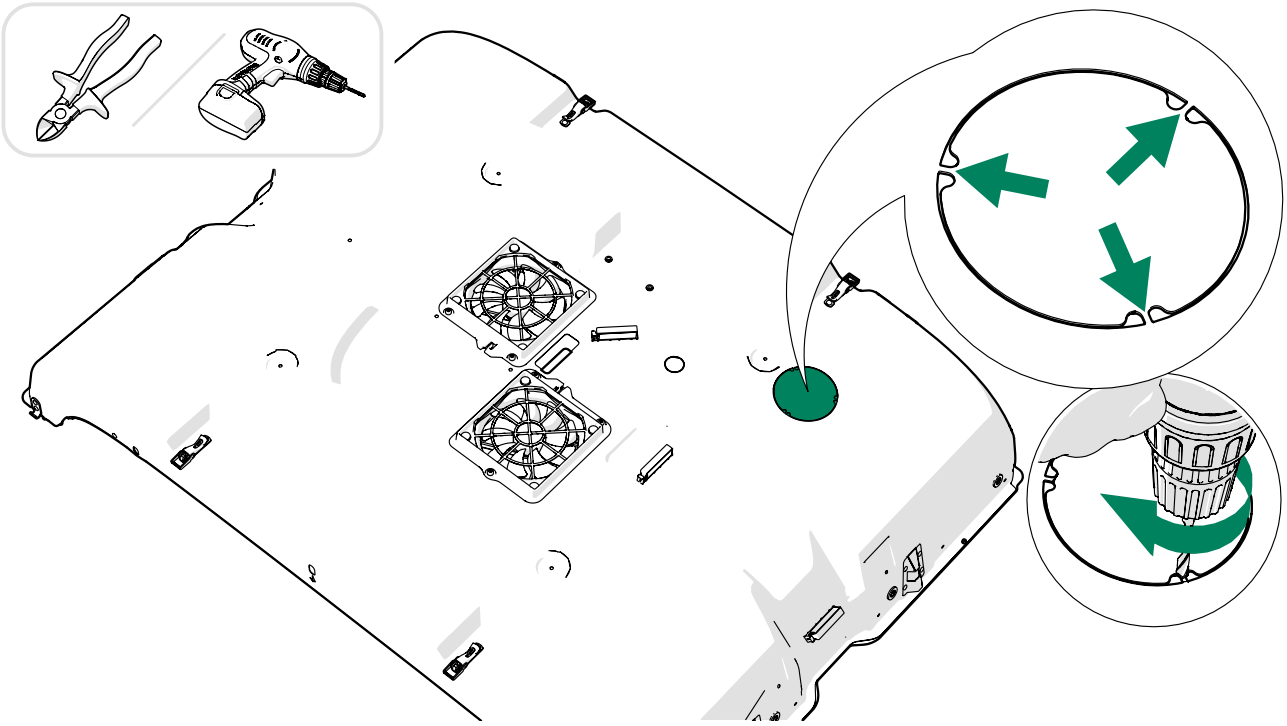

3. Cut away the acoustic material. Use a utility knife or a hole saw.

Note: Do not cut through the roof.

Note: Make sure that the hole in the acoustic material is as small as possible. Use the sprinkler as a size guide.

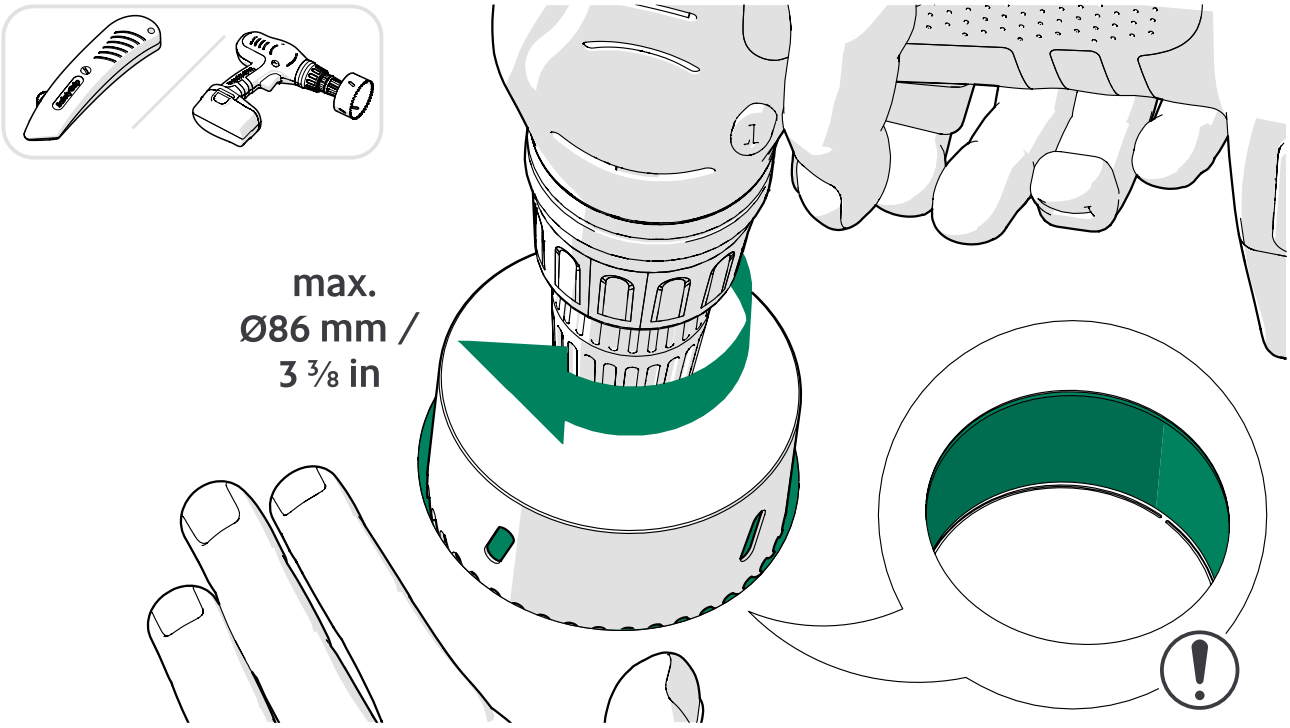

4. Cut away the flap on the roof under the acoustic material. Use side cutters or a drill.

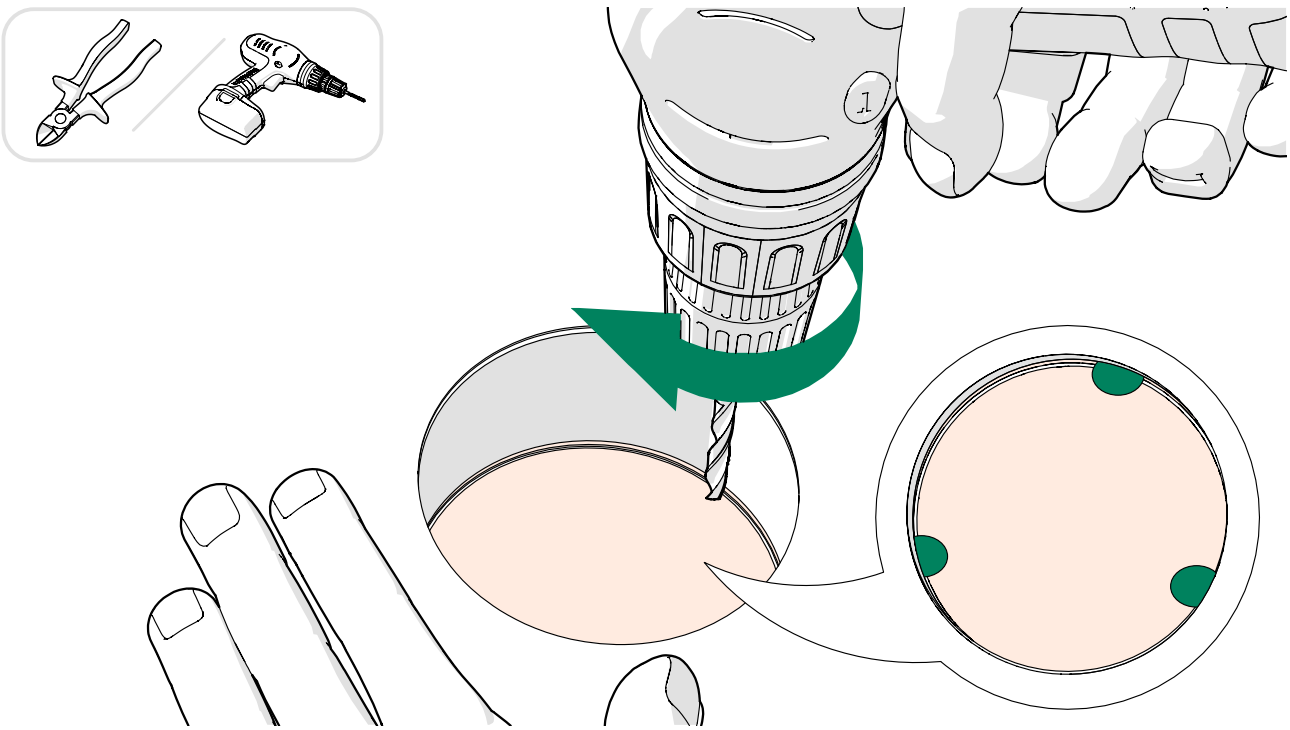

5. Drill a pilot hole through the ceiling panel to the middle of the hole.

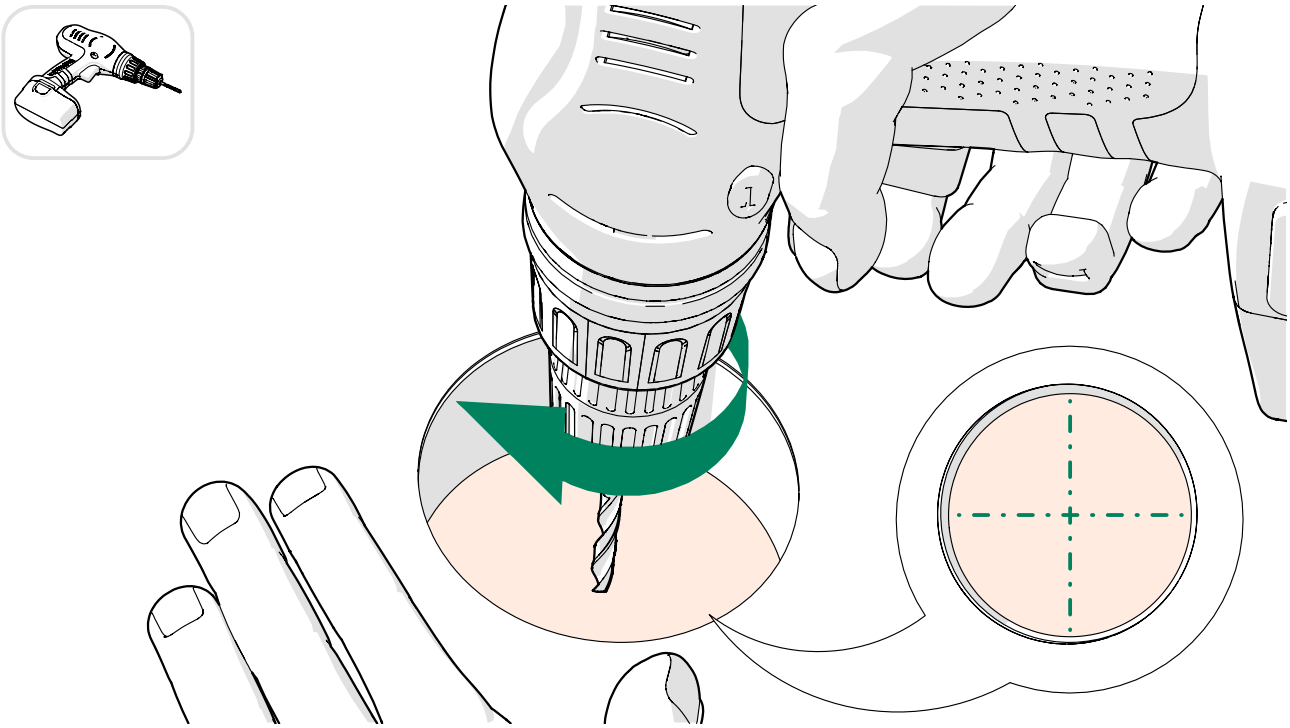

6. Flip the roof module the other way round.

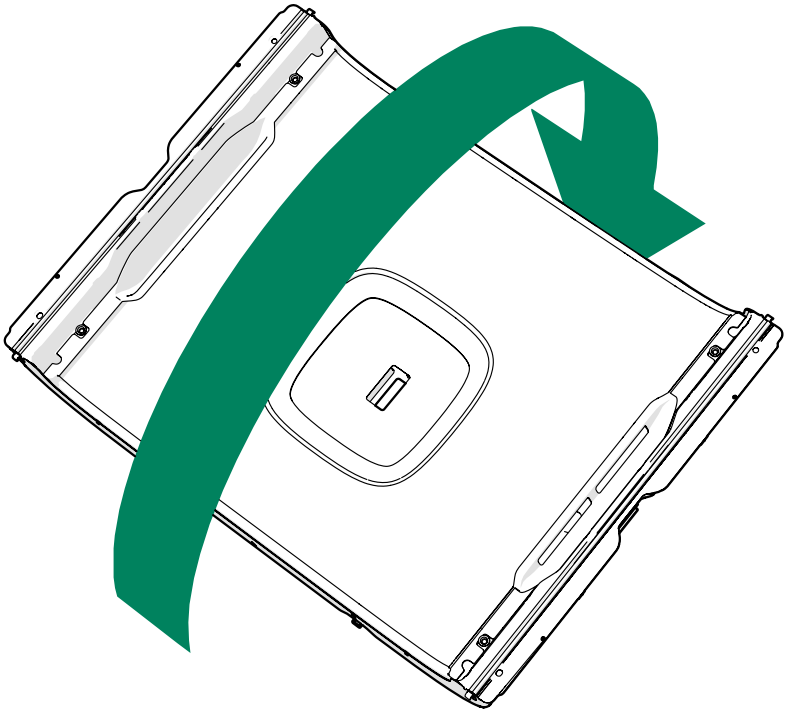

7. Draw the cut line to the ceiling panel from inside. Use the sprinkler cover as a drawing guide.

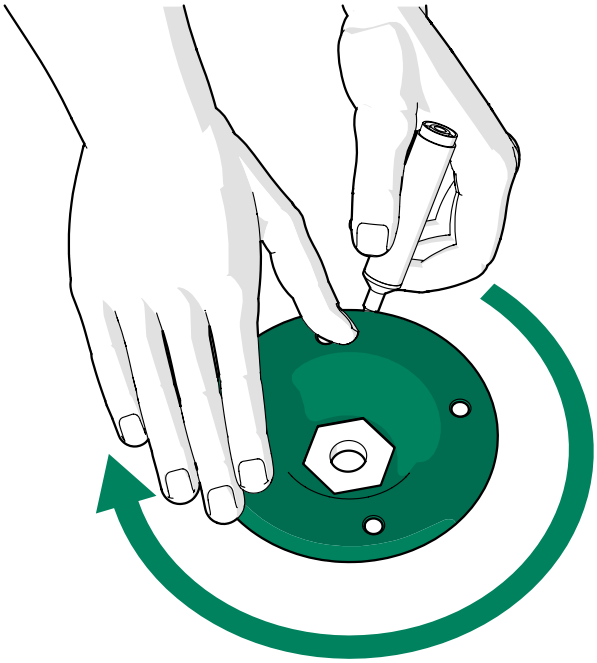

8. Cut away the marked aread from the ceiling panel. Use a utility knife.

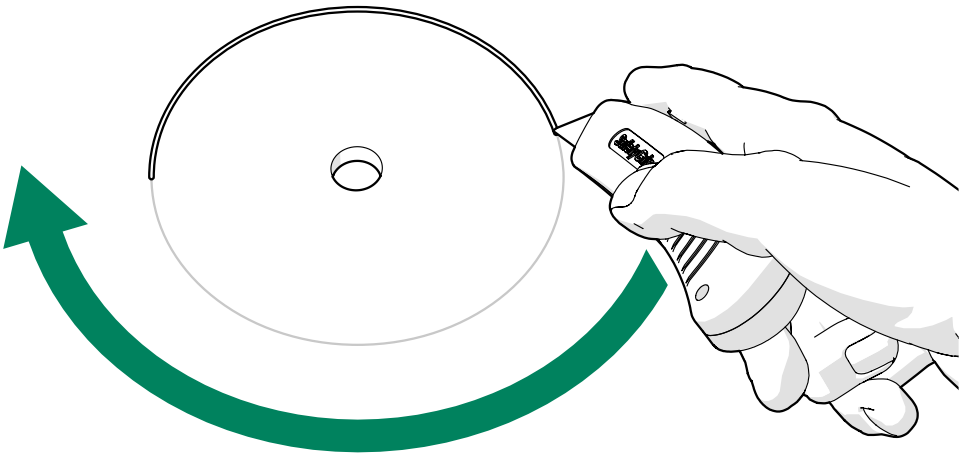

9. Install the sprinkler to the ceiling panel with screws (4 pcs).

Note: The maximum recommended screw size is 5x35.

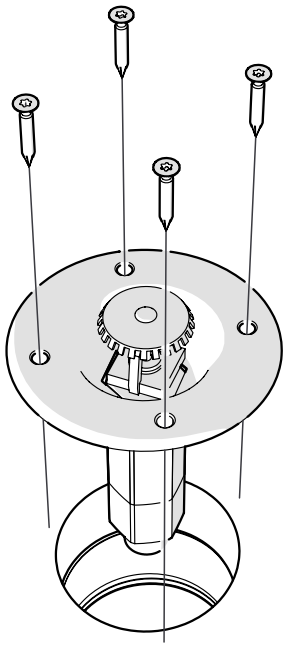

7 Reassemble

7.1 Install the roof

1. Place the roof module onto the lifting supports.

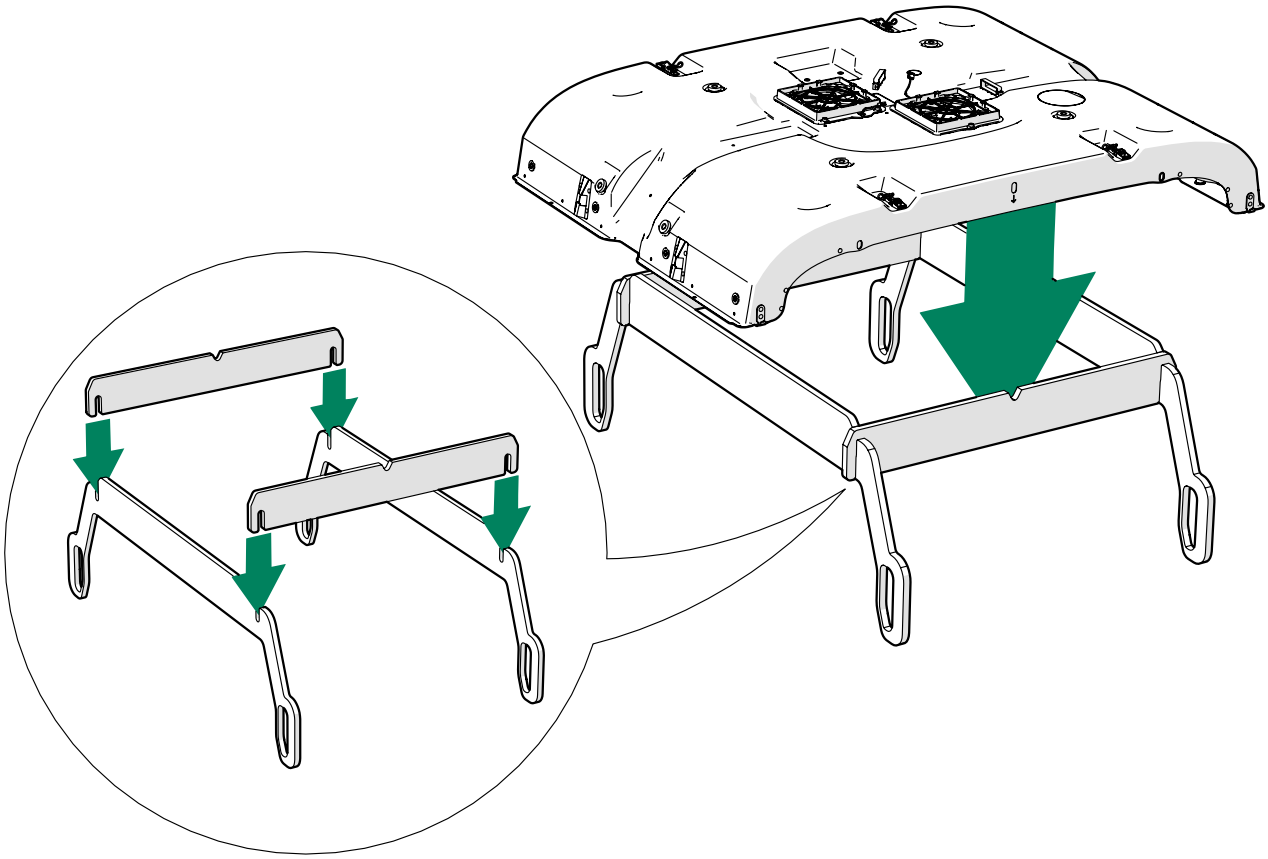

2. Lift the roof carefully into place.

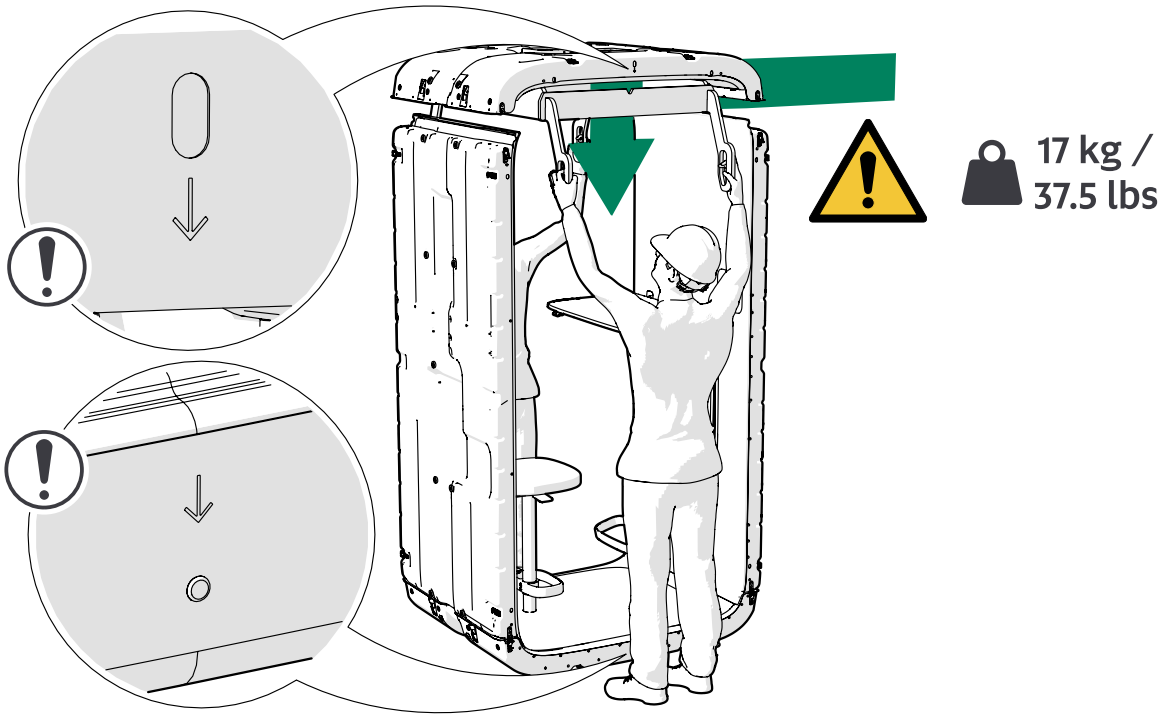

3. Close the latches (4 pcs) and insert the pins (4 pcs) around the roof.

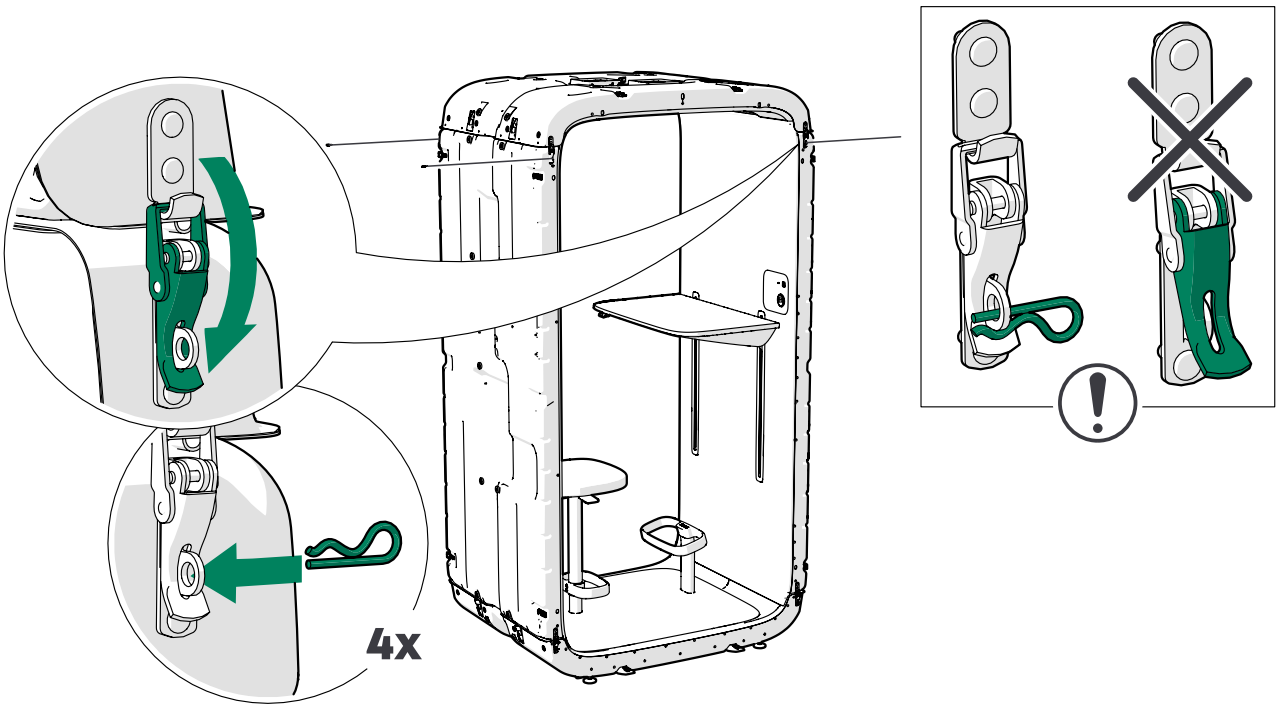

7.2 Install the glass wall

1. Position the glass wall close to the back of the pod so that the hooks on the frame are directly above the slots in the floor.

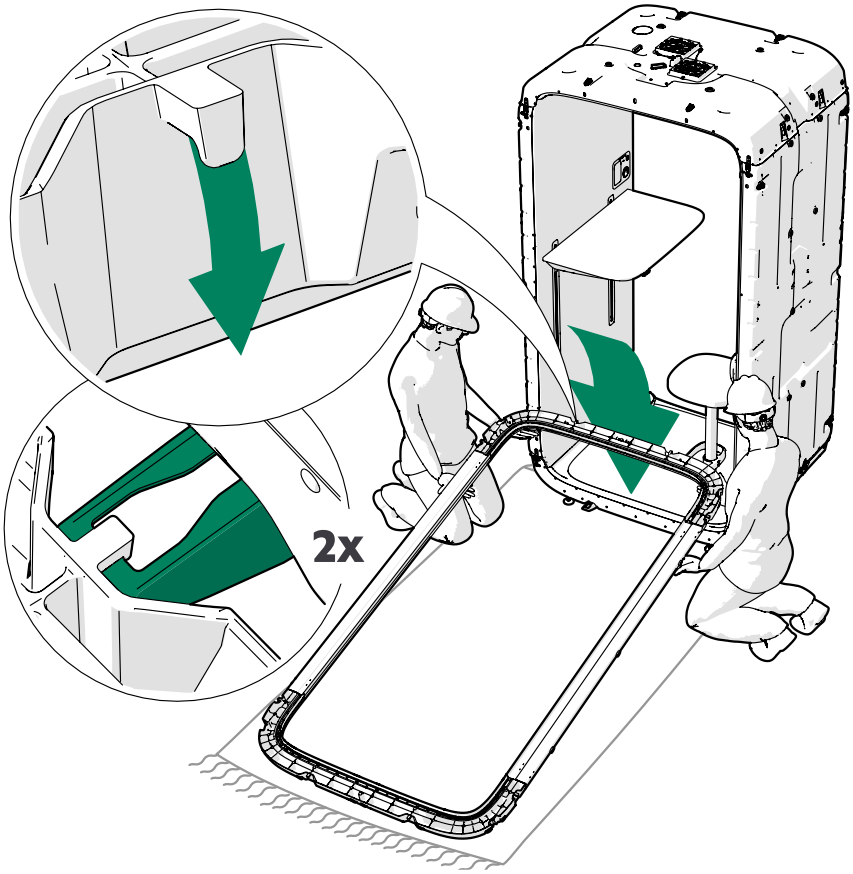

2. Install the guide pin to the frame.

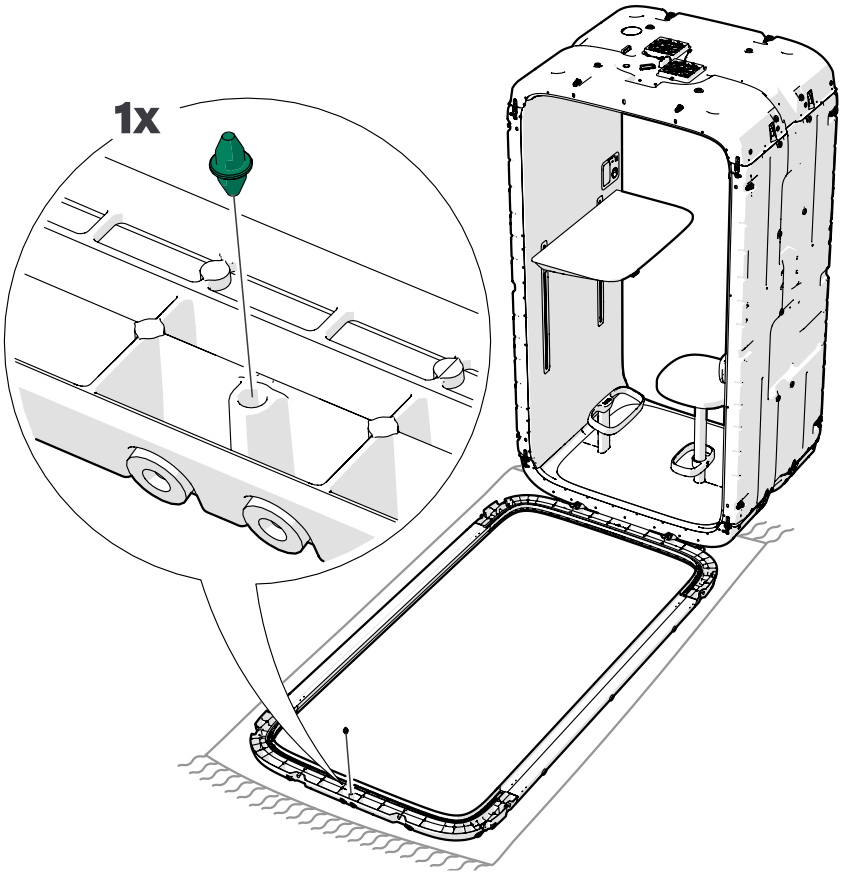

3. Lift the glass wall into place.

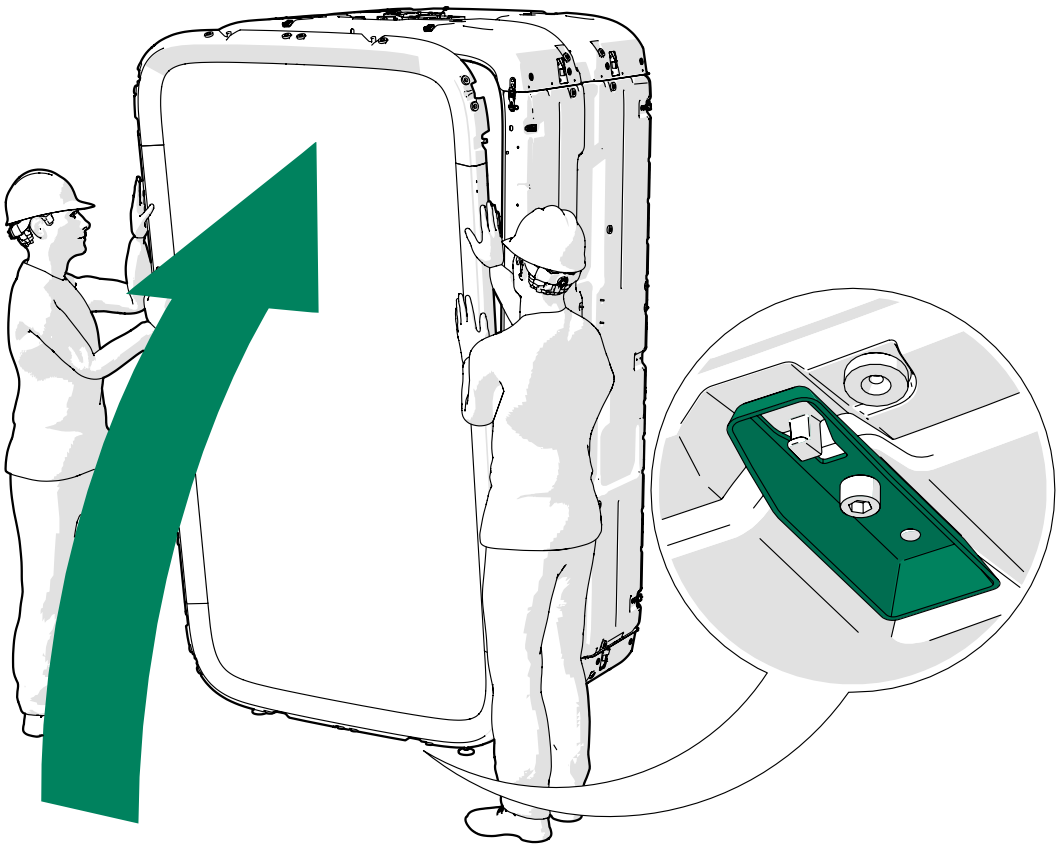

4. Close the latches (6 pcs) and insert the pins (6 pcs) around the glass wall frame.

   Note: Support the glass wall until all latches are secured.

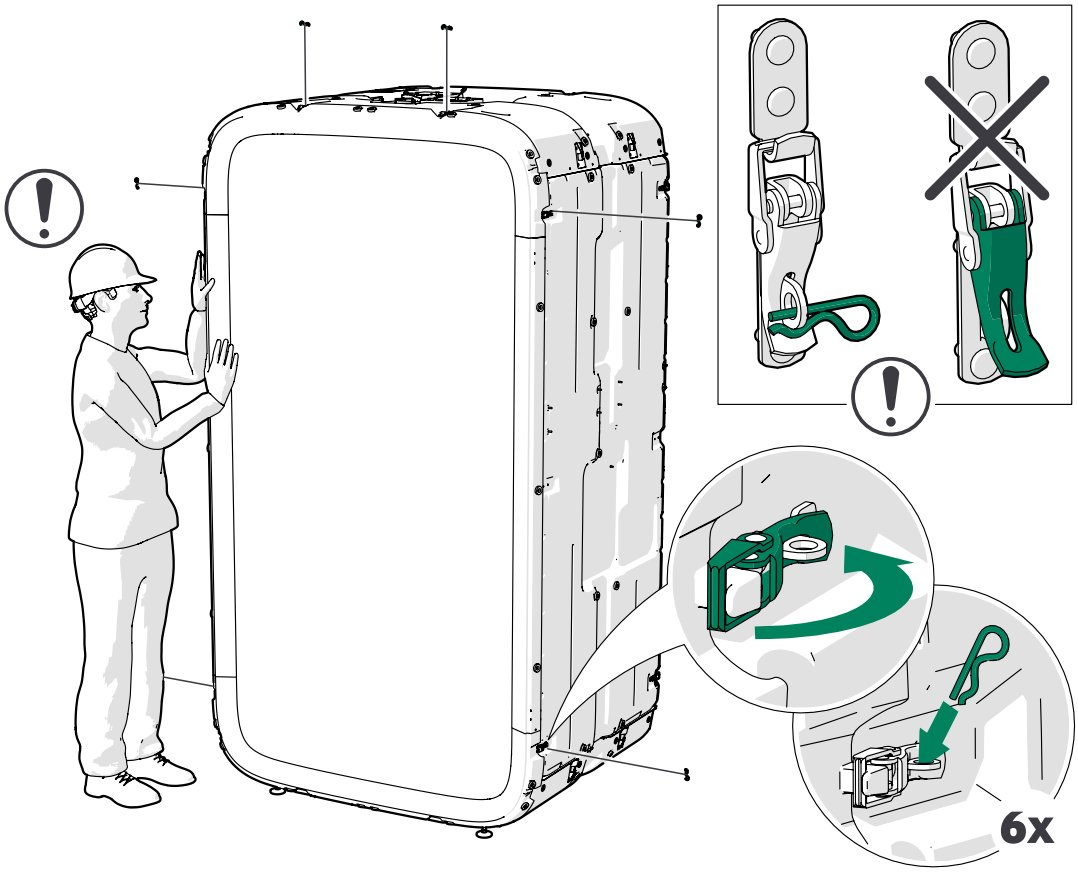

7.3 Install the front frame and door

1. Install the door brace to the front frame with door.

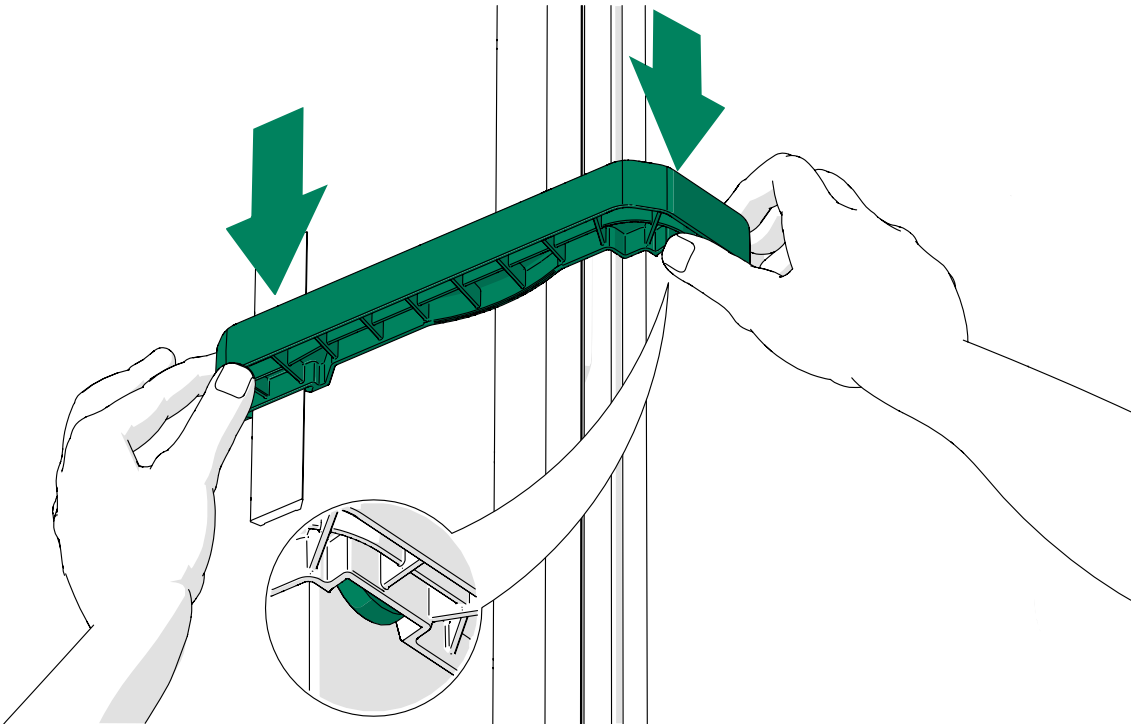

2. Lift the front frame with door next to the pod.

Note: Make sure that the door brace is in place before lifting the new front frame with door.

Warning: Risk of injury or damage to property. Heavy object. Make sure that you observe safe lifting practices.

Note: Make sure that the carpet is in place before lifting the new front frame with door next to the pod. The carpet is needed to protect the frame from scratches.

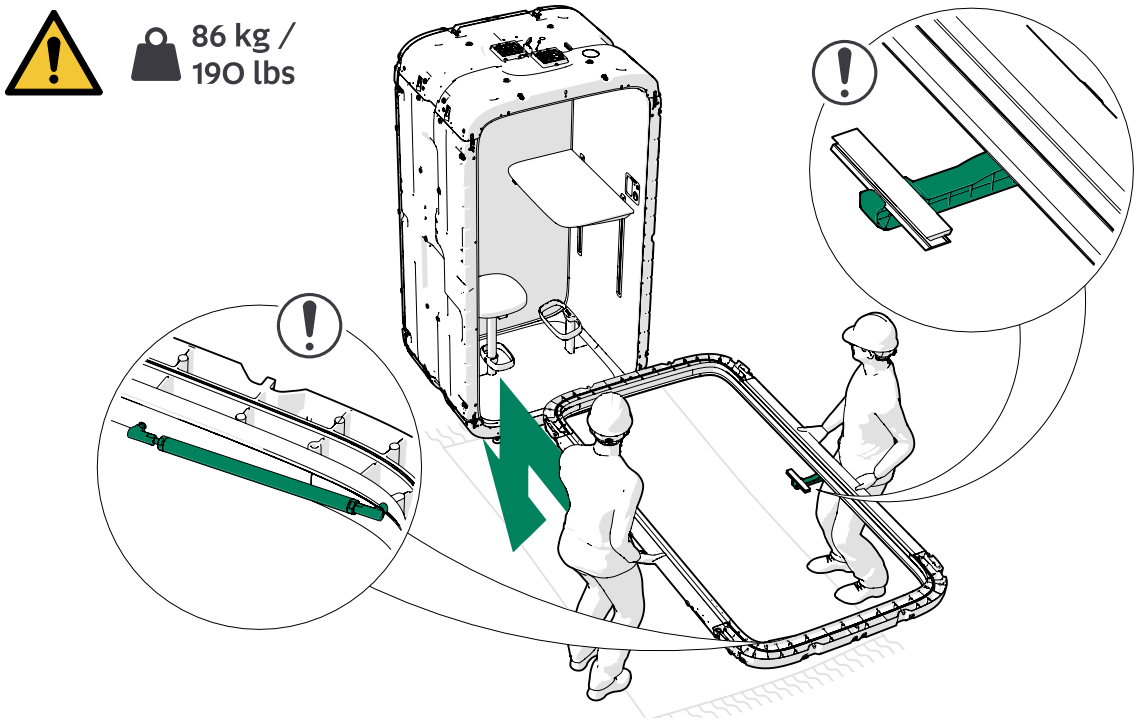

3. Position the front frame with door close to the front of the pod so that the hooks on the frame are directly above the slots in the floor.

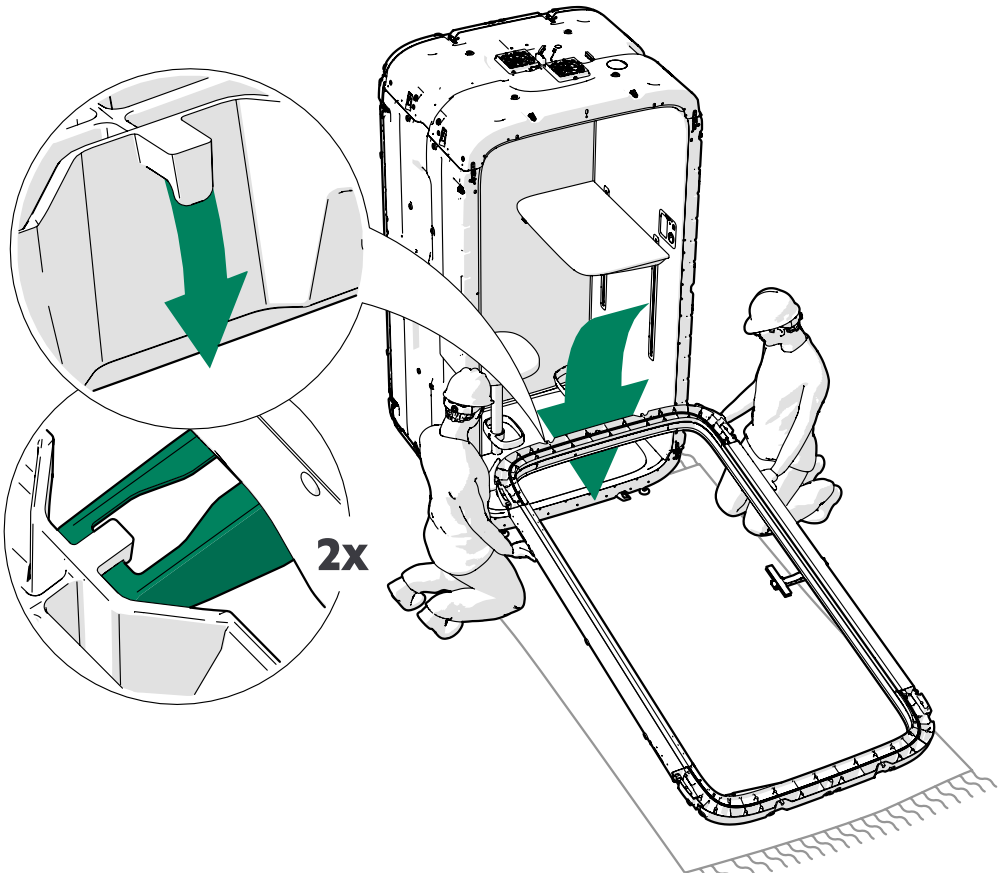

4. Install the guide pin to the frame.

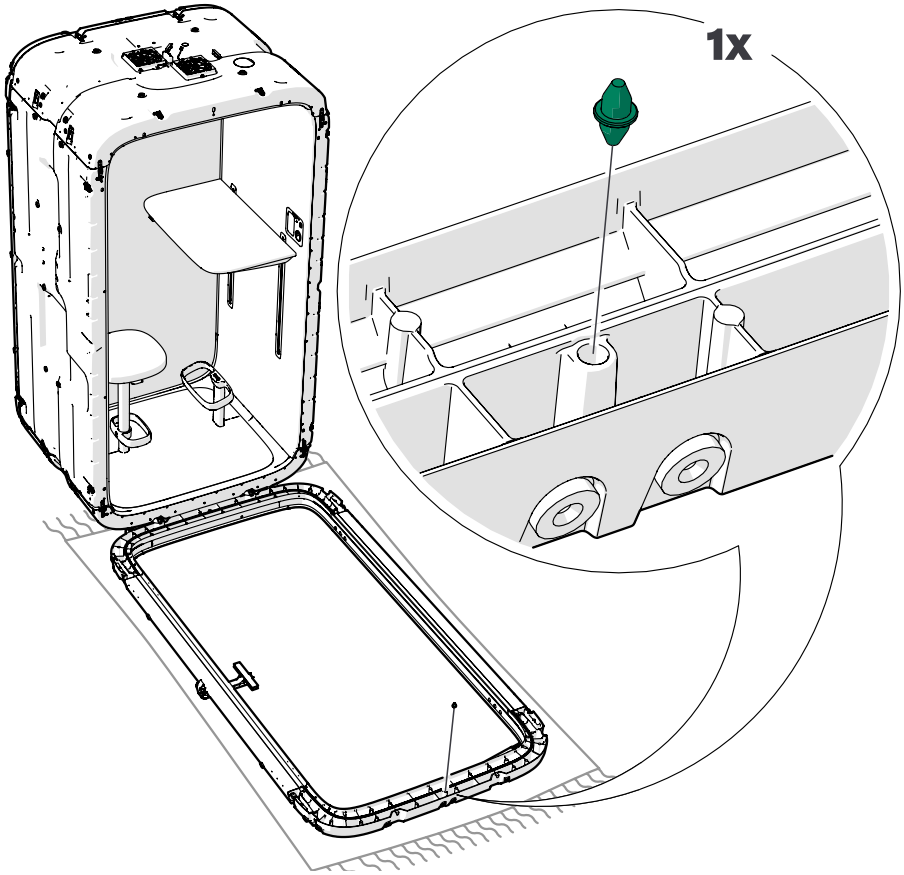

5. Lift the front frame with door into place.

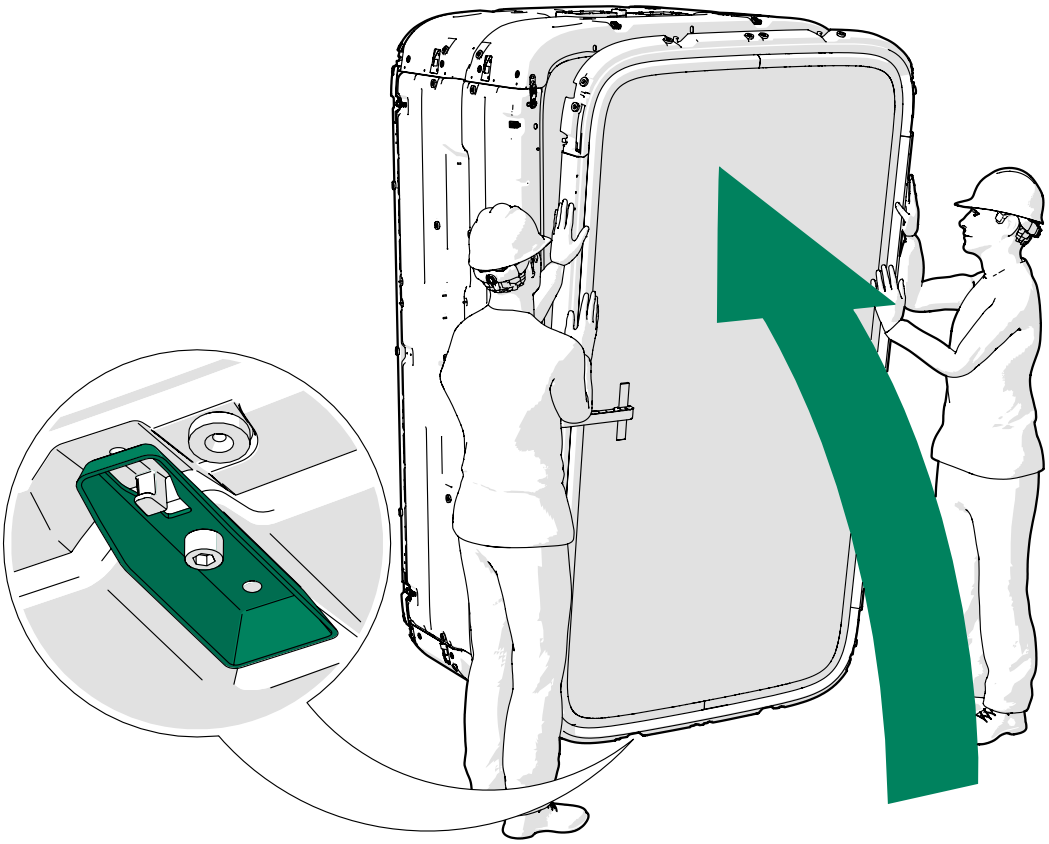

6. Close the latches (6 pcs) and insert the pins (6 pcs) around the front frame.

Note: Support the front frame with door until all latches are secured.

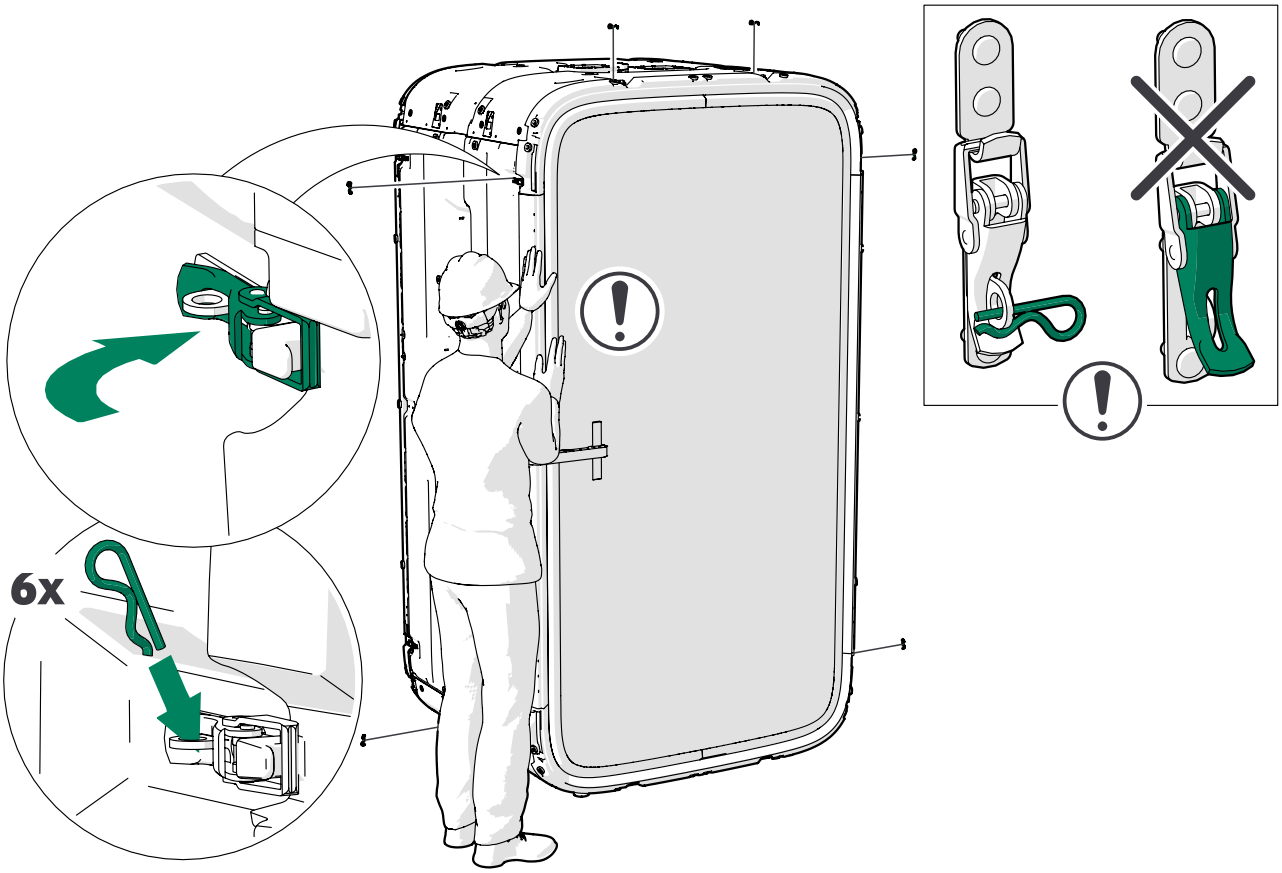

7. Remove the door brace and install the outside door handle.

   Note: Make sure that the set screw is at the bottom.

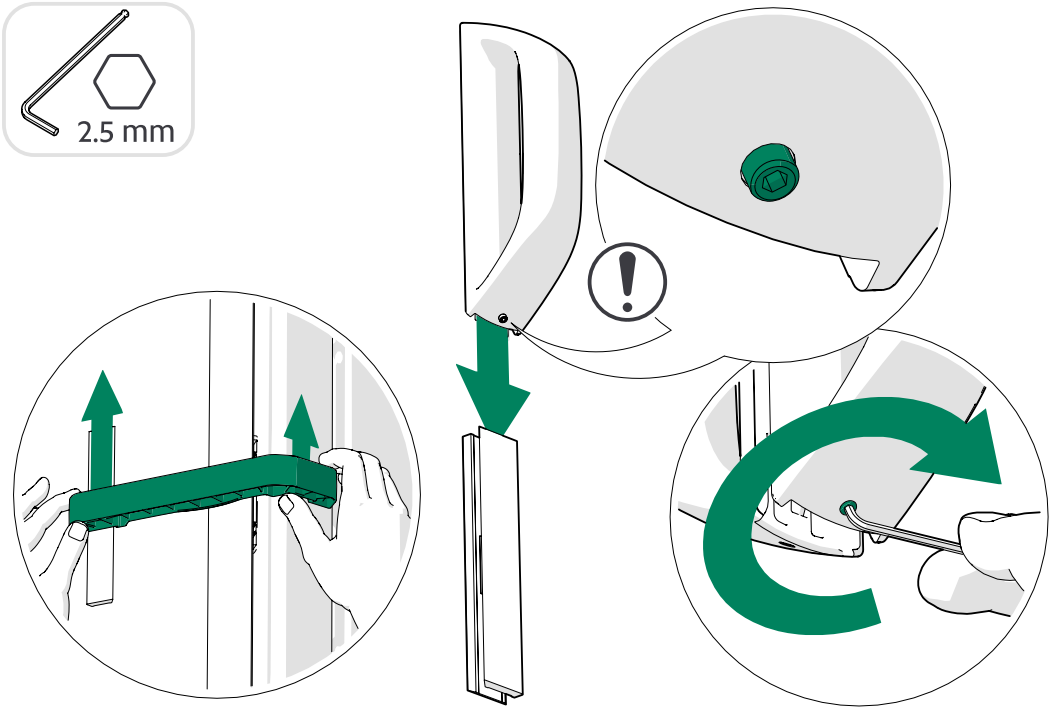

7.4 Connect the electrical connections in the roof

1. Install the light with control hub.
   The light with control hub attaches to the ceiling with magnets.

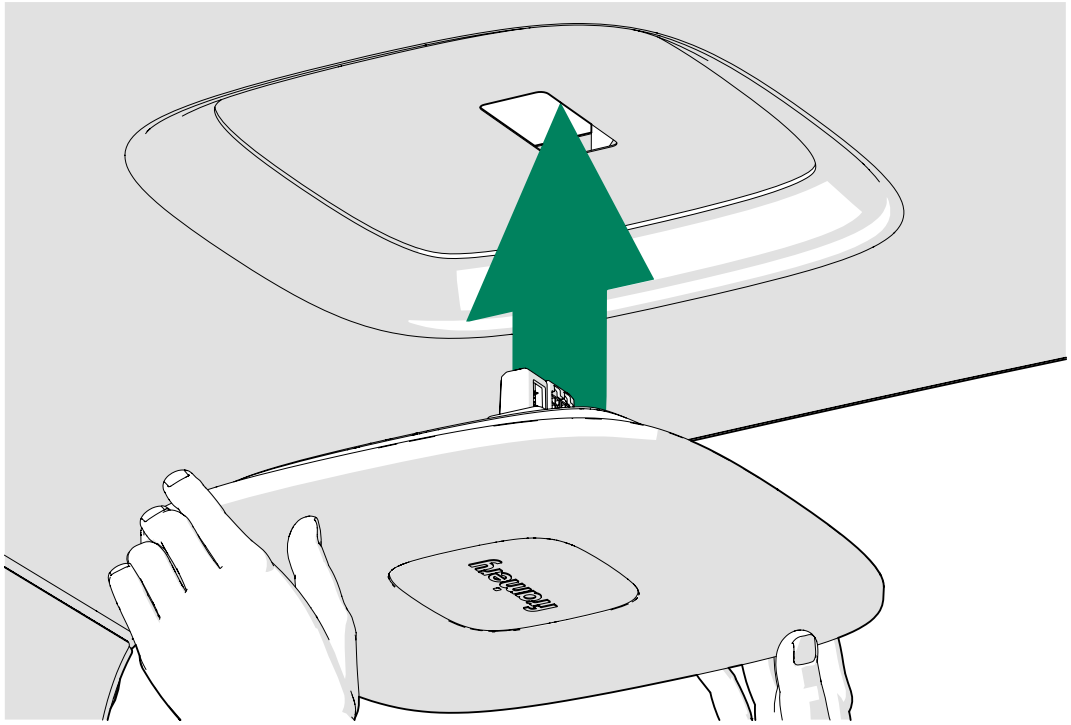

2. Connect the long CAN cord to the control hub.

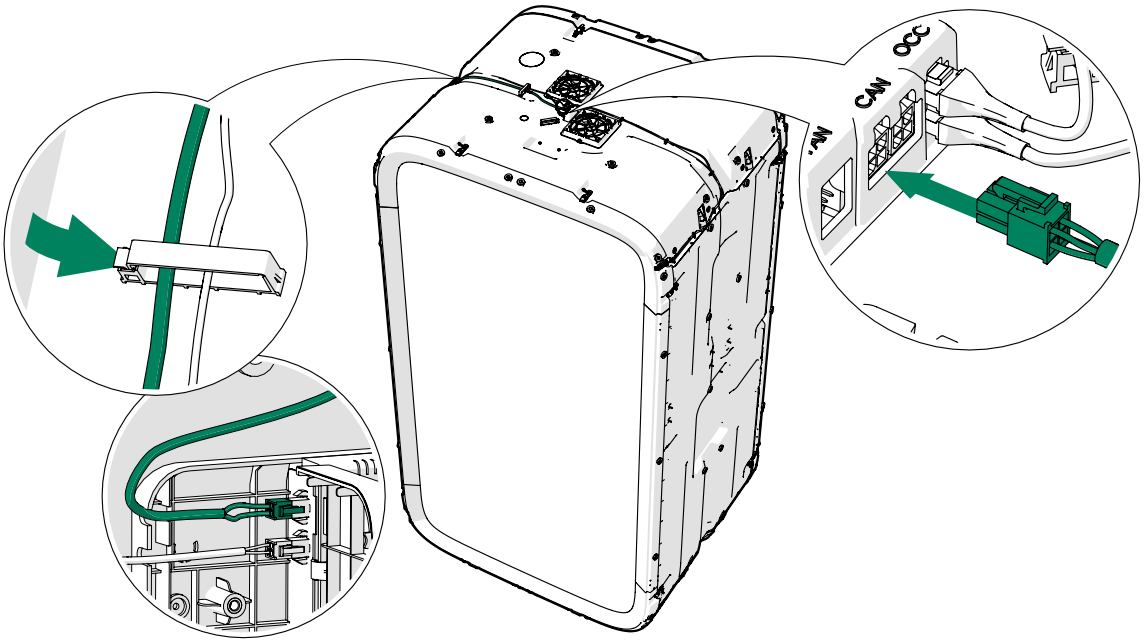

3. Connect the fan cords to the control hub.

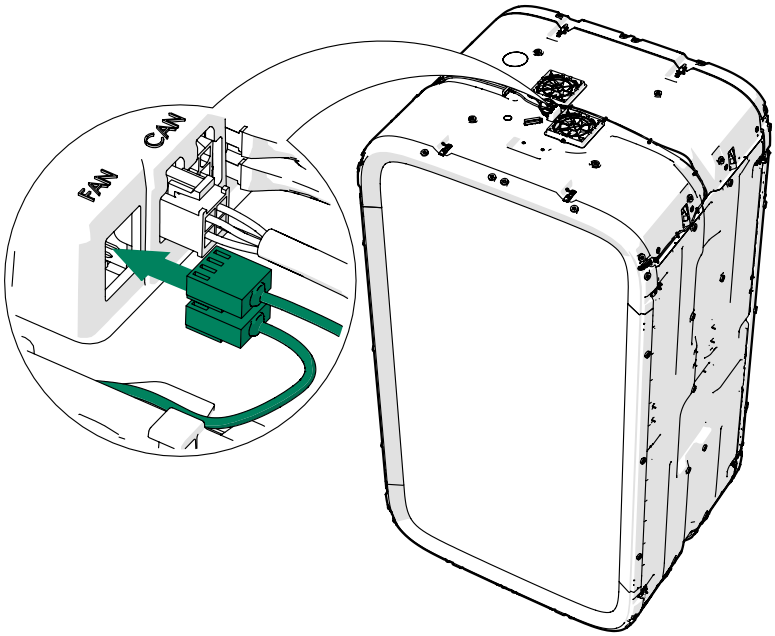

4. If the power cord is installed to the roof module, connect the power cord to the extension cord.

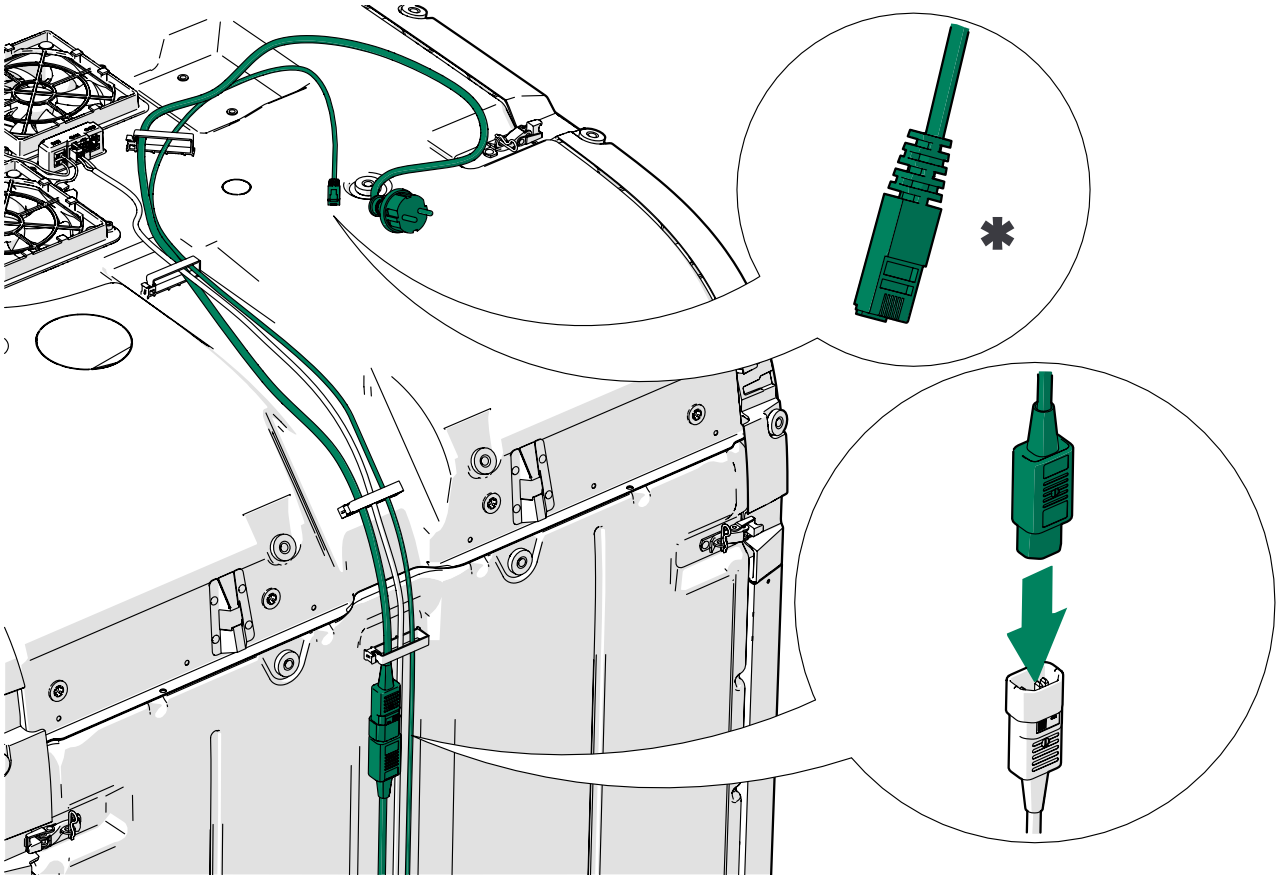

Figure 5: * = Optional LAN cord

5. Guide the wire of the wired device through the strain relief and reinstall it.

Note: If the power cord is installed to the roof module, guide the power cord through the strain relief.

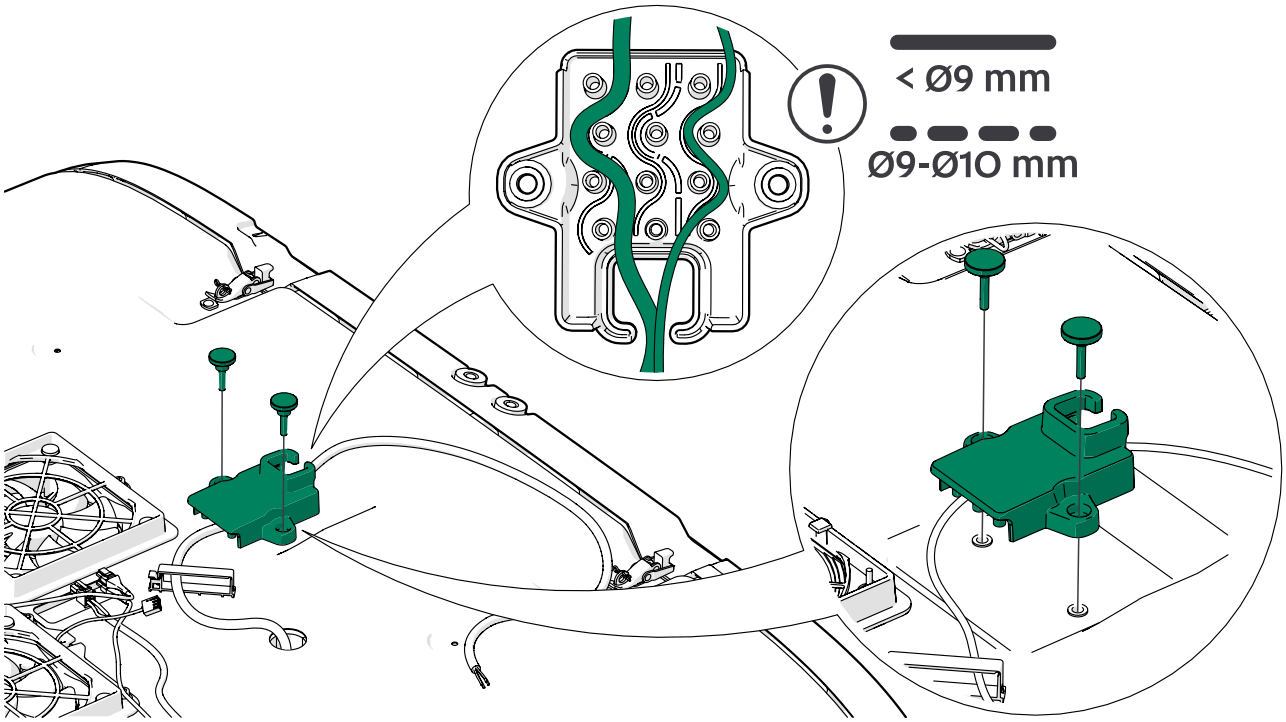

6. Install the occupancy indicator lights to the back of the pod.

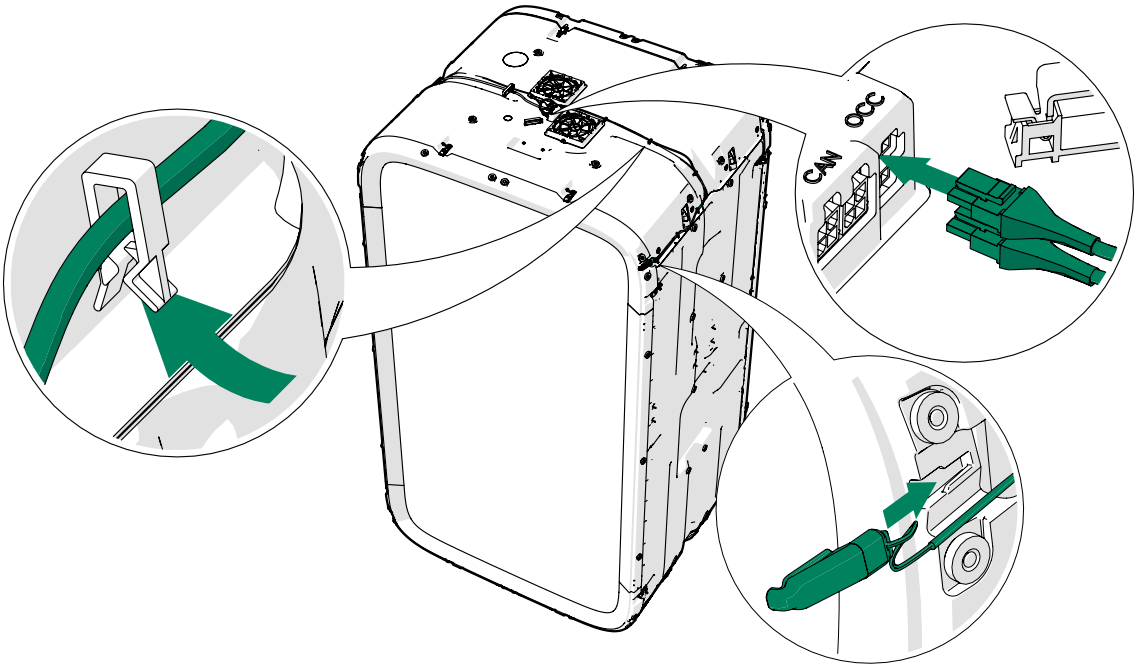

7.5 Install the body covers

1. Install the floor body covers.

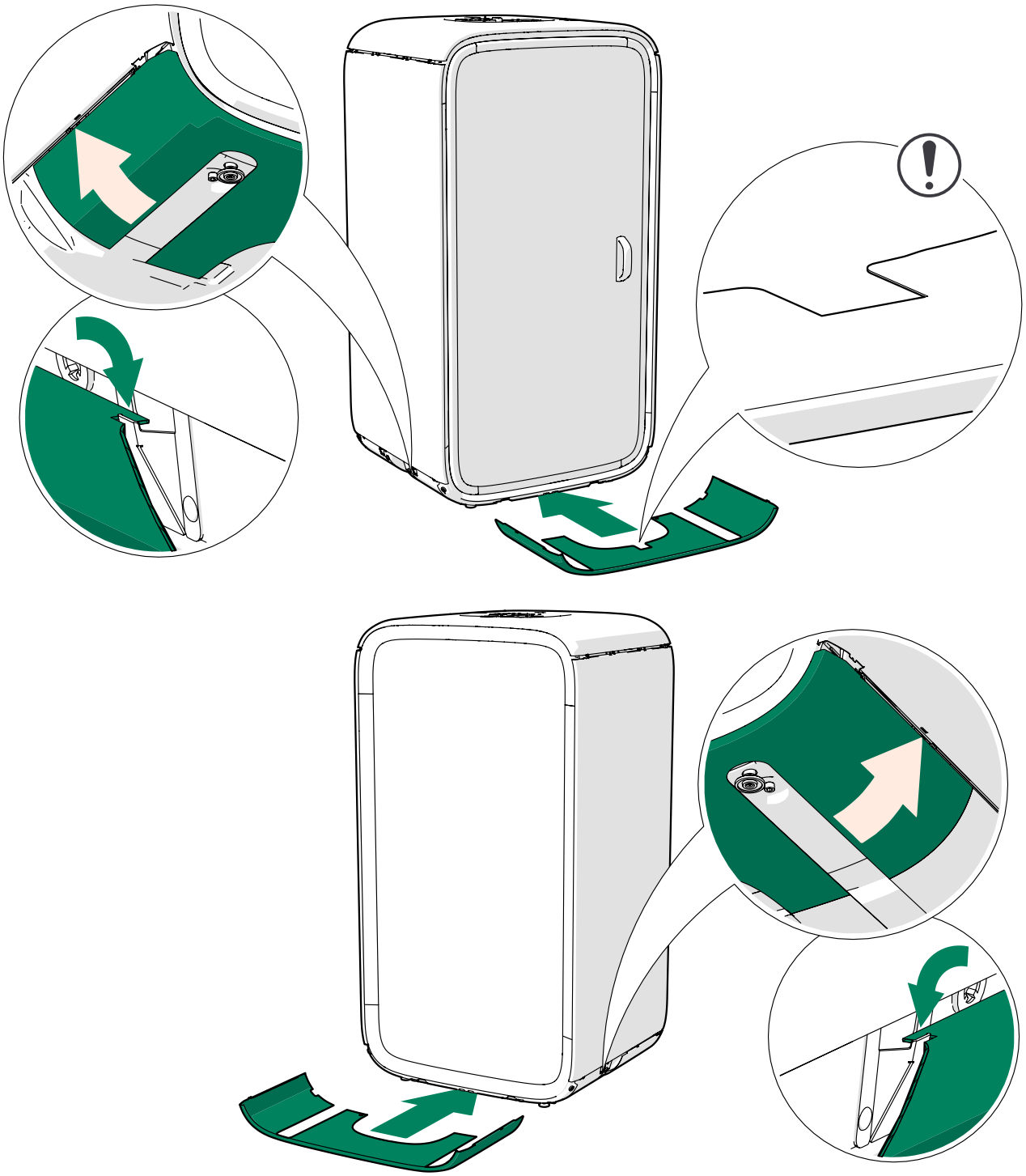

2. Install the wall body covers.

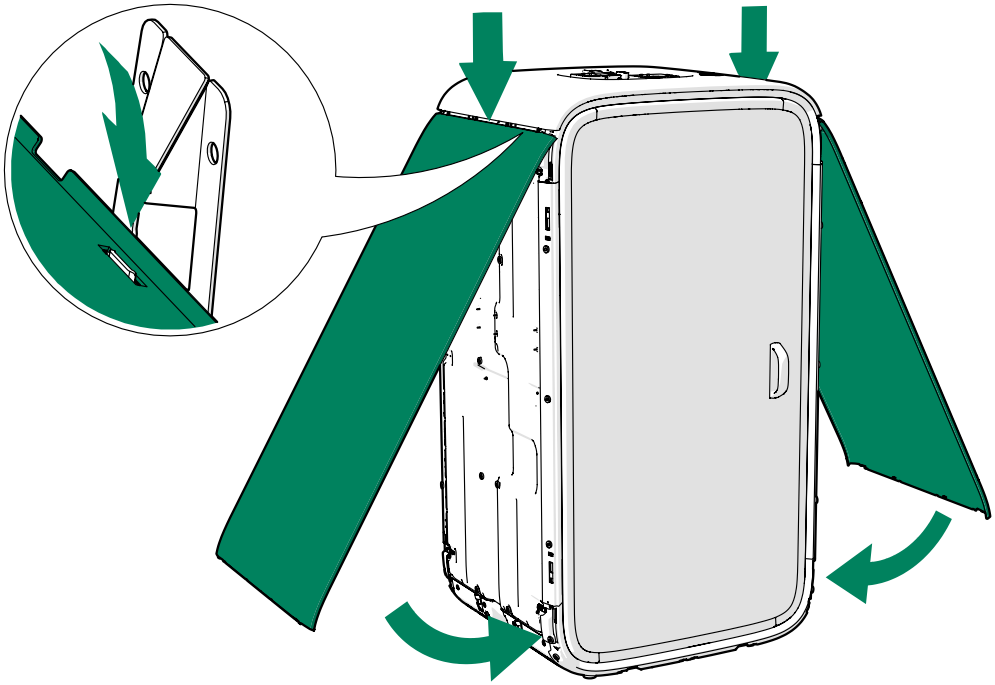

3. Install the roof body cover.

Note: If you installed the wired device, guide the wire out of the cut in the cover. Make sure that the cord is not damaged during the installation.

Note: If you installed the power cord to roof module, guide the power cord out of the cut in the cover. Make sure that the cord is not damaged during the installation.

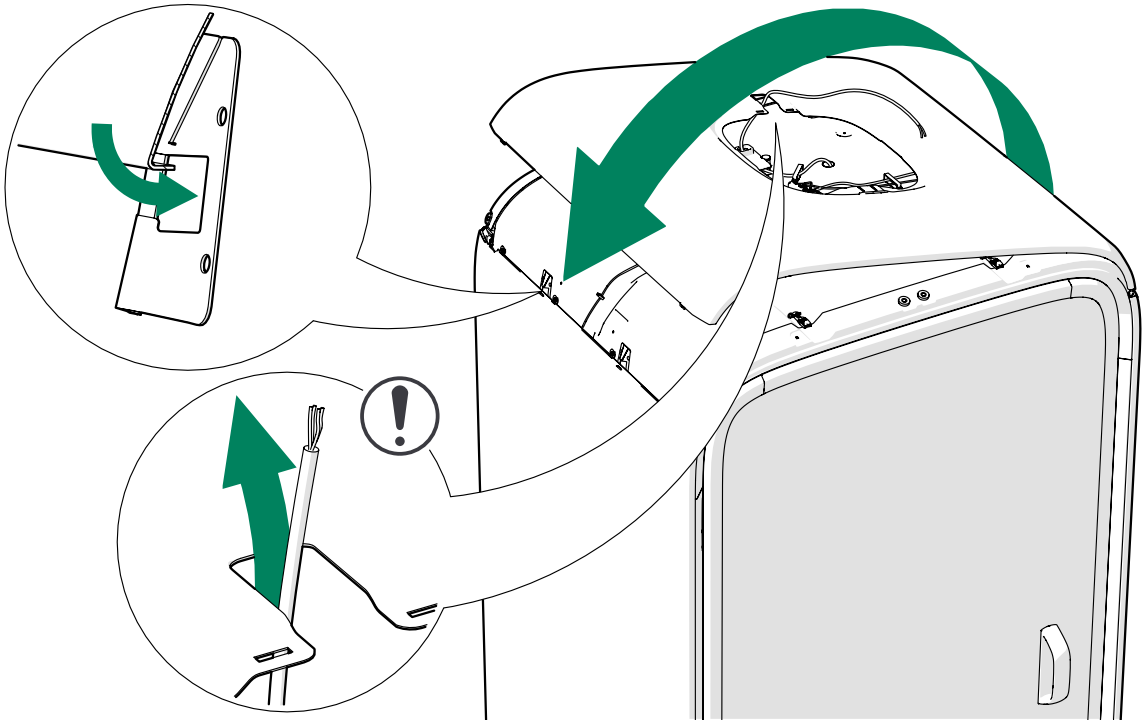

4. Install the plastic trims.

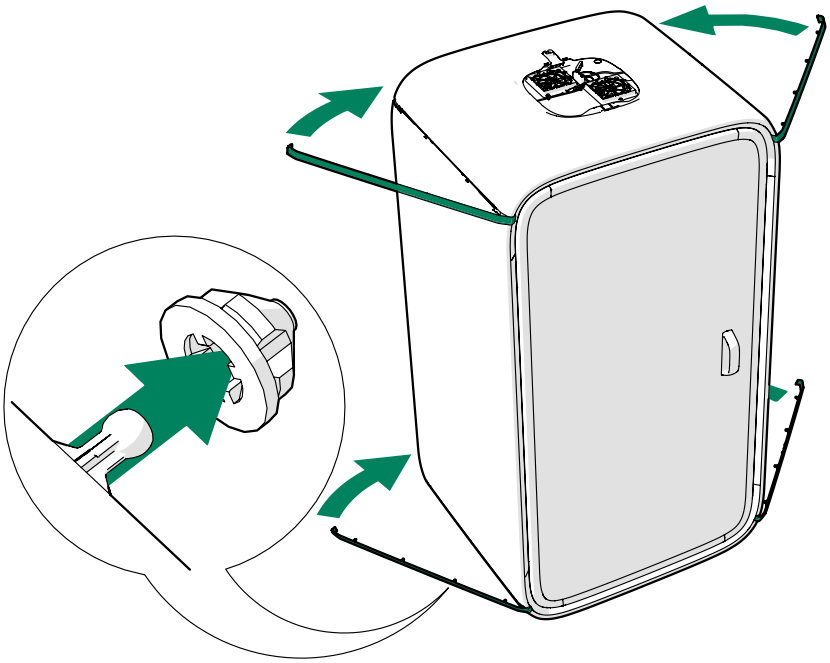

5. Install the fan cover.

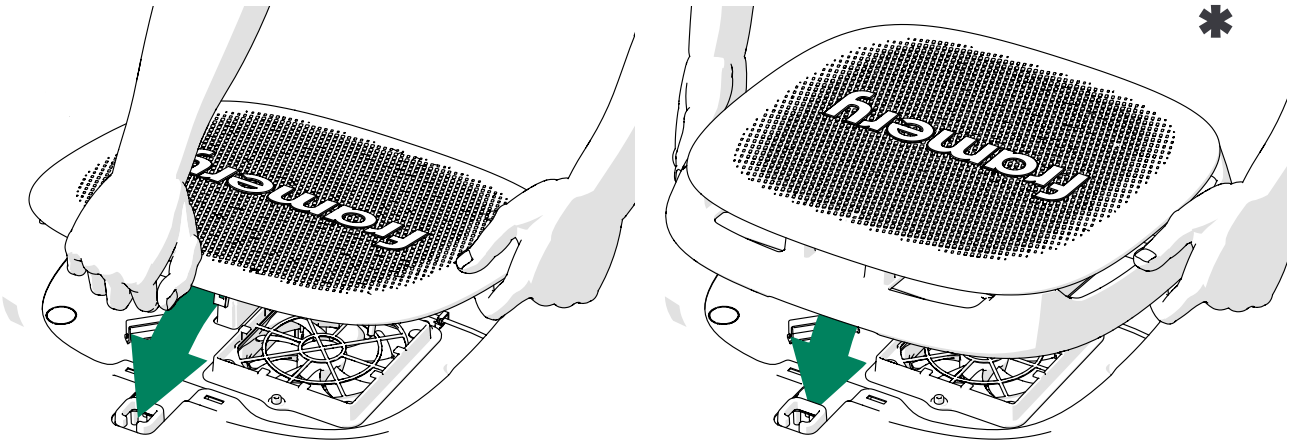

Figure 6: * = With optional activated carbon filter

6. Install a rubber seal onto the roof to cover the installation hole.

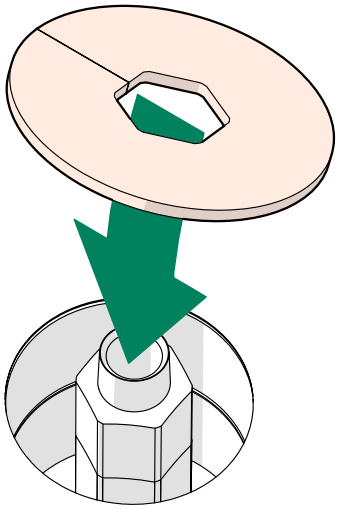

8 Finalize the installation

1. Connect the power cord.

   If equipped with the optional LAN, also connect the LAN cord to the outlet.

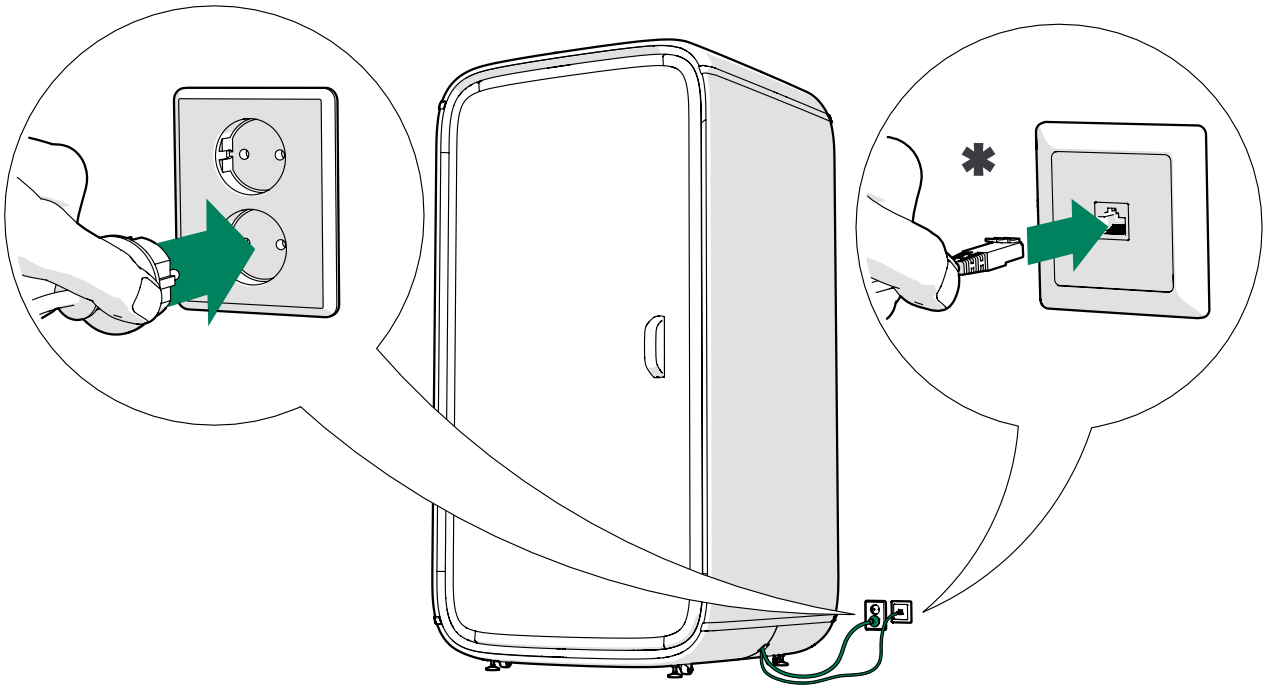

Figure 7: * = Optional LAN cord

Framery One

Framery One
Fire Safety
Patamäenkatu 7
33900 Tampere
FINLAND
VAT: FI 23527139